FAE

CEGTS1

EXHAUST GAS TEMPERATURE SENSORS
SENSORES TEMPERATURA DE GASES DE ESCAPE
CAPTEURS TEMPÉRATURE DES GAZ D'ÉCHAPPEMENT

www.fae.es

FAE

European Quality Manufacturing Since 1952

Fabricación de Calidad Europea Desde 1952

15xxx - CGM
Pressure Sensors
Sensores de Presión

161xx - CGM
Exhaust Gas Pressure Sensors
Sensores Presión Gas de Escape

56xxx - CEV
Electric Valves
Electroválvulas

60xxx - CGM
Knock Sensors
Sensores de Detonación

66xxx - CPS
Parking Sensors
Sensores de Aparcamiento

68xxx - CEGTS
Exhaust Gas Temperature Sensors
Sensores Temperatura Gases Escape

73xxx - CBP / CEV
Diesel Stop Solenoids Switches
Solenoides - Electroválvulas

75xxx - 77xxx - COX
Oxygen Sensors / Wide Band Oxygen Sensors / AFR
Sondas Lambda / Sondas Lambda Banda Ancha / AFR

76xxx - 79xxx - CGM
Cam & Crankshaft Sensors (CMP&CKP) / Speed Sensors
Captadores de Impulsos (CMP&CKP) / Sensores Velocidad

78xxx - CABS
Wheel Speed Sensors - ABS
Sensores Revoluciones Rueda - ABS

80xxx - 83xxx - 85xxx - 86xxx - CE
Ignition Coils / Ignition Cable Sets
Bobinas de Encendido / Juego de Cables de Encendido

70xxx - 71xxx - 74xxx - CBP
Termoplus - Glow plugs / Standard
Calentadores - Termoplus / Standard

14xxx - Ci
Oil and Air Pressure Sensors
Sensores de Presión de Aceite y Aire

16xxx - 17xxx - 18xxx - Ci
Pneumatic switches
Manocontactos Neumáticos

185xx - Ci
High pressure switch
Interruptor alta presión

Switches / Manocontacto - **Ci**
- **Oil Pressure** / Presión de aceite **10/11/12/13xxx**
- **Pneumatic** / Neumático **26/27/28xxx**

Switches / **Interruptores** - **Ci**
- **Hydraulic Stop** / Stop hidráulico **20/21/22xxx**
- **Mechanical Stop** / Stop mecánico **23/24/25xxx**
- **Pneumatic Stop** / Stop neumático **26/27/28xxx**
- **Reversing Light** / Marcha atrás **40/41xxx**
- **Clutch** / Embrague **24xxx**

6xxxx - 98xxx - 99xxx - Ci
Accessories, Gauges, Kits, Gadgets, Various
Accesorios, Indicadores, Kits, Gadgets, Varios

33xxx - CGM
Temperature Sensors
Sensores Temperatura

30xxx - 34xxx - CGM
Temperature Sending Units / Thermistors - Thermocontacts
Termo-Resistencias

35xxx - 36xxx - 37xxx - 38xxx - Ci
Radiator Fan Switches / Temperature Warning Light Switches
Termocontactos Ventilador / Temperatura

54xxx - 5xxxxxx - CT
Thermostats / Water Flanges
Termostatos / Tapas

55xxx - CEV / CT
Control Valves (Heating)
Electroválvulas Termostáticas (Calefacción)

CEGTS	CPS	COX	CGM	CABS	CEV
Exhaust Gas Temperature S. Sensores Temperatura Gases E.	Parking Sensors Sensores aparcamiento	Oxygen Sensors Sondas Lambda	Engine Management Gestión del Motor	Wheel Speed Sensors - ABS Sensores Rev. Rueda - ABS	Electric Valves Electroválvulas

CE	CVi	Ci	CT	CBP	
Ignition Encendido	Industrial vehicle Vehículo industrial	Switches and Sensors Interruptores y Sensores	Thermostats Termostatos	Termoplus - Glow Plugs Bujías de Precalentamiento	eCatalog

INTRODUCTION
INTRODUCCIÓN
INTRODUCTION 3

TECHNICAL INFORMATION
INFORMACIÓN TÉCNICA
INFORMATION TECHNIQUE ..... 4 - 9

ILLUSTRATED PART
PARTE ILUSTRADA
PARTIE ILLUSTRÉE ..... 11 - 21

· Examples; Reference guide
· Ejemplos; Guía de consulta
· Exemples ; Guide de référence 12

GLOSSARY
GLOSARIO
GLOSSAIRE ..... 22 - 26

VEHICLE APPLICATIONS
APLICACIONES POR VEHÍCULO
APPLICATIONS POUR VÉHICULE ..... 27 - 95

· Index of makers
· Índice de fabricantes
· Index des constructeurs 28

· Car applications
· Aplicaciones por coche
· Applications pour voiture ..... 29 - 69

· Car applications
· Aplicaciones por coche
· Applications pour voiture ..... 71 - 95

CROSS REFERENCES
CRUCE DE REFERENCIAS
TABLEAU DES EQUIVALENCES ..... 97 - 109

NOTES
NOTAS
REMARQUES

INTRODUCTION / WARRANTY

FAE considers quality as a top priority, which is why we are immersed in a continuous improvement, promoting the use of the most advanced methods for project design and manufacturing of our products, such as Computer Aided Design (CAD), automated controls and processes, to obtain reliability tests, etc., allowing us to overcome successfully our client's quality audits, and even developing jointly new products for their new vehicles. With this catalogue, we intend to help our clients in the rapid identification of our products.
Due to the constant variations made by vehicle manufacturers, we cannot ensure the full accuracy of the information indicated in this **FAE** catalogue, which should be used only as a guide.
Names and references of the manufactures serve only to help you find more quickly our products.

WARRANTY:
FAE guarantees all products against any manufacturing defects. This guarantee is limited to the replacement of faulty parts. **FAE** does not hold itself responsible for the improper use of the product by untrained and non-skilled personnel. Any **FAE** product installed in applications not specified in this catalog will not be subject to warranty.

NOTES:
REFUND POLICY - **FAE** controls 100% the production of all its products, checks and saves all manufacturing information. **FAE** does not refund any article which has been taken out of its heat sealed plastic wrap.
- **FAE** does not accept any return of material, after a period of 15 days from the date of delivery. The return is subject of revision by **FAE**.
- **FAE** will refer to the Court of Barcelona in case of litigation.
- **FAE** reserves the right to modify the characteristics of its products without prior warning.

FAE products have the technology to replace and adapt to the original equivalent and must be installed by skilled specialist, having technical vehicle assembly knowledge and following **FAE** or the original manufacturer's instructions. Installments of **FAE** parts by a non-skilled specialist which lead to a problem in the correct functioning of the part and/or the vehicle, will not be **FAE**'s responsibility.

INTRODUCCIÓN / GARANTÍA

FAE considera la calidad como un objetivo prioritario, y por ello, estamos inmersos en una mejora continua, promoviendo la aplicación de los medios más innovadores para el proyecto y fabricación de nuestros productos, como son el Diseño Asistido por Ordenador (CAD), la automatización de controles y procesos para obtener ensayos de fiabilidad, etc., que nos permiten superar con éxito las auditorías de calidad de nuestros clientes, llegando a desarrollar conjuntamente productos para sus nuevos vehículos. Con este catálogo, pretendemos ayudar a nuestros clientes en la rápida identificación de los productos de nuestra fabricación. Debido a las constantes variaciones de los fabricantes de vehículos, no podemos garantizar la completa exactitud de la información que se indica en este catálogo de **FAE**, sirviendo únicamente como guía. Los nombres y referencias de los fabricantes sirven únicamente para ayudar a encontrar más rápidamente nuestros productos.

GARANTÍA:
FAE garantiza todos los productos contra fallos de fabricación. La garantía se limita al cambio del producto defectuoso, **FAE** no cubre la mala aplicación o manipulación del mismo por personal no especializado. Cualquier producto **FAE** instalado en aplicaciones no especificadas en este catálogo no estará sujeto a garantía.

NOTAS:
DEVOLUCIÓN- **FAE** controla al 100% la producción de todos sus productos, comprueba y guarda la información del comportamiento de cada uno de ellos en el momento de su fabricación. Si cualquier producto ha sido extraído de su envoltorio de plástico, que va termo-sellado, no se podrá aceptar su devolución.
- **FAE** no aceptará ninguna devolución de material transcurridos 15 días de la fecha de suministro. Condicionado a la revisión del material devuelto.
- **FAE** ante cualquier tipo de litigio se remite a los Tribunales de Barcelona.
- **FAE** se reserva el derecho a modificar las características de sus productos sin previo aviso.

Los productos **FAE** tienen la tecnología para reemplazar y adaptarse a los equivalentes de origen y deben ser montados por personal especializado y con conocimientos en el montaje de componentes del vehículo, siguiendo las instrucciones de montaje de la pieza **FAE** y/o del origen. Cualquier montaje realizado por personal no especializado que represente un problema en el funcionamiento de la pieza y/o del vehículo no será responsabilidad de **FAE**.

INTRODUCTION / GARANTIE

FAE conçoit la qualité comme un objectif prioritaire, pour cela, nous nous engageons à améliorer constamment notre manière de faire, en utilisant au possible les moyens les plus modernes dans le développement et la fabrication de nos produits, tels que la conception assistée par ordinateur (CAD), l'automatisation des contrôles et des processus pour obtenir des tests de fiabilité, etc. Cela nous permet de passer avec succès les contrôles qualité de nos clients et de développer même avec eux des nouveaux produits pour leurs tous derniers véhicules. Nous avons faits en sorte que ce catalogue aide nos clients à identifier rapidement les produits de notre fabrication.
Etant données les fréquentes modifications des fabricants de véhicules, nous ne pouvons pas garantir la complète exactitude des informations apportées par ce catalogue **FAE** qui doit seulement être considéré comme un guide. Ainsi les noms et références des fabricants sont mentionnés dans l'unique but de faciliter la recherche de nos produits.

GARANTIE :
FAE garantie ses produits contre tout défaut de fabrication. La garantie est limitée au remplacement de la pièce défectueuse et ne couvre pas sa mauvaise installation ou encore la fausse manipulation de celle-ci par personnel non formé. Tout produit **FAE** installé dans des applications non spécifiées dans ce catalogue ne sera pas couvert par la garantie.

REMARQUES :
REMBOURSEMENT- **FAE** contrôle à 100% la production de tous ses produits. Nous vérifions et gardons toutes les informations concernant leur comportement lors de la fabrication. Dès lors que n'importe quel produit a été extrait de son emballage plastique étanche, nous ne procédons à aucun remboursement.
- **FAE** décline tout retour du matériel, après 15 jours à compter de la date de livraison. Le retour sera soumis à une révision par **FAE**.
- **FAE** s'en remettra aux Tribunaux de Barcelone en cas de litige.
- **FAE** se réserve le droit de modifier les caractéristiques de ses produits sans aucun avis préalable.

Les produits **FAE** ont la technologie pour remplacer et s'adapter à leurs équivalents d'origine. Ils doivent être assemblés par personnel qualifié et compétent dans l'ensemble des composants du véhicule, suivant les instructions de montage de la pièce **FAE** et/ou de l'origine. Tout assemblage par personnel non qualifié qui représente un problème dans le fonctionnement de la pièce et/ou du véhicule ne sera pas de la responsabilité de **FAE**.

TECHNICAL INFORMATION

FAE EXHAUST GAS TEMPERATURE SENSORS

The EGTS detects exhaust gas temperature, converts it into a voltage, and sends that voltage signal to the engine control unit (ECU) to monitor engine conditions and effectively reduce emissions.

In petrol engines, if the sensor detects excessive temperatures, the ECU will reduce the temperature by lowering the boost pressure. In diesel engines, the sensor is used to monitor the temperature of the diesel particulate filter (DPF) to determine the exact temperature for regeneration.

Where are they located inside the vehicle?

EGT sensors can be found at multiple points in the vehicle's exhaust system. As they're used to monitor exhaust gas temperatures and protect critical systems from overheating or failure, these sensors are generally located near these critical system components. For example, one or more EGT sensors may be located near the EGR valve, turbocharger and diesel particulate filter to ensure proper system efficiency.

A - Before and after the turbocharger (Turbo)
The EGT sensor fitted around the turbocharger verifies that the component temperature has dropped to around 150°C to 200°C for proper operation, while also monitoring the temperature of the component for overheating.

B - Before and after the diesel oxidation catalyst (DOC)
The EGT sensor fitted around the diesel oxidation catalyst (DOC) is to monitor the inlet exhaust temperature, with a minimum temperature of 200°C required for operation. It also monitors the health of the component, such as for DOC clogging or overheating.

C - Before and after the diesel particulate filter (DPF)
The EGT sensor fitted around the diesel particulate filter (DPF) verifies the DPF regeneration process is complete and effective. It also monitors the health of the component, such as for DPF clogging or overheating.

D - Before and after selective catalytic reduction (SCR)
The EGT sensor fitted around the selective catalytic reduction (SCR) monitors the temperature of the inlet exhaust, which requires a temperature of around 200°C to 400°C to start working, and that the outlet exhaust has been properly treated.

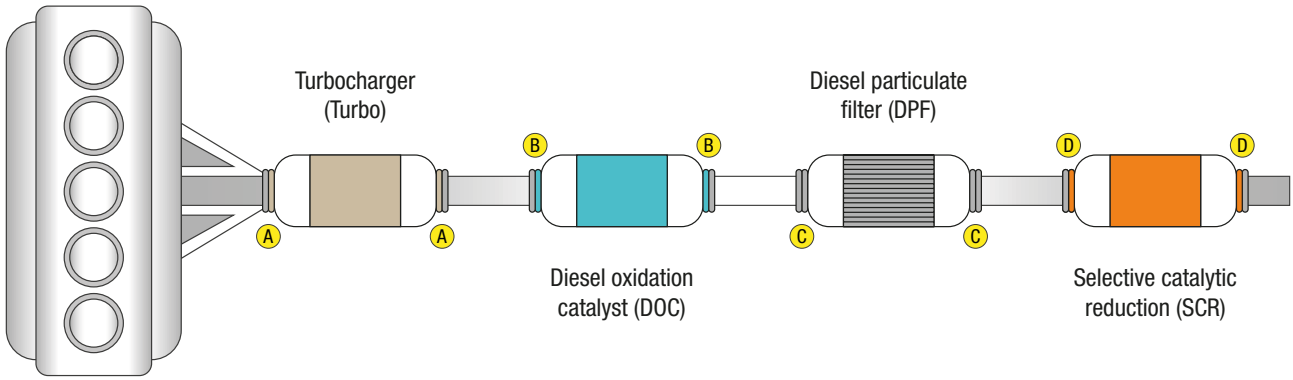

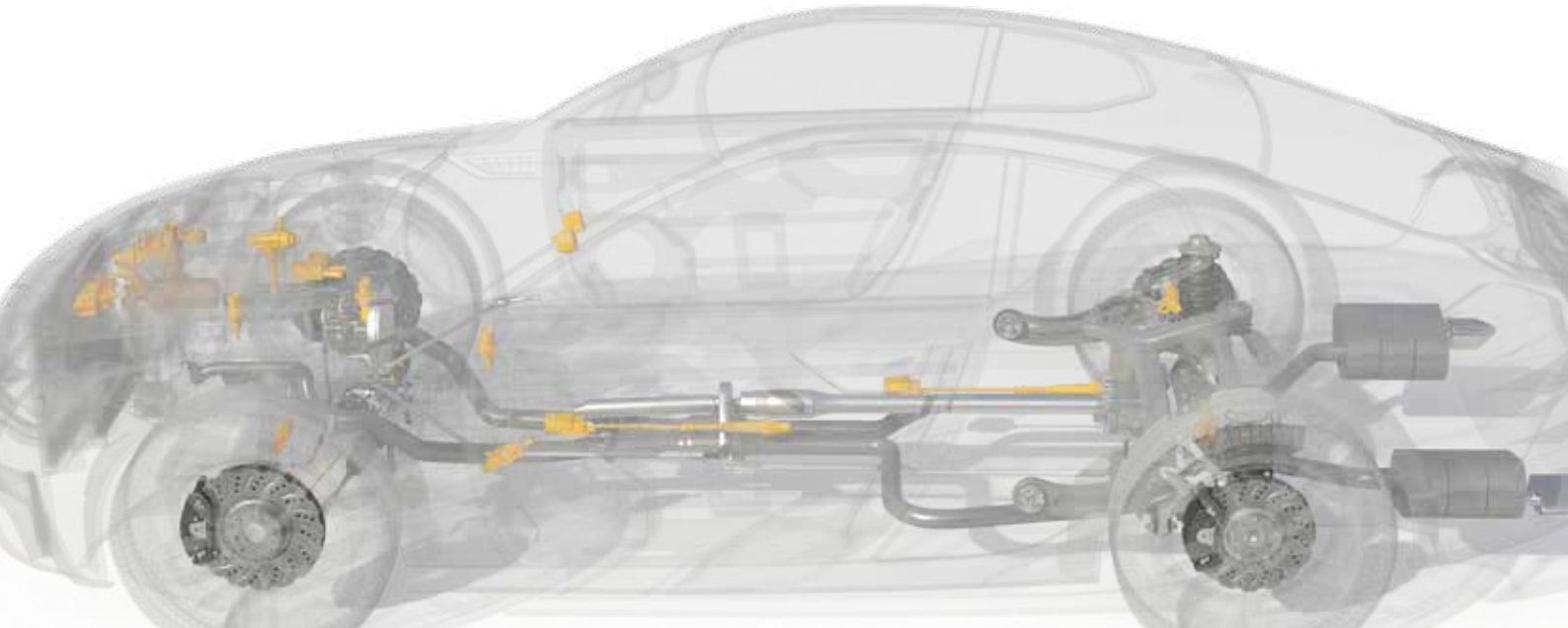

TECHNICAL INFORMATION

Typical applications

- Control and monitoring of the diesel particulate filter on diesel vehicles
- Monitoring of SCR ca converters for heavy-duty diesel engines
- Protection of temperature-sensitive components (e.g. turbocharger)
- Integration into on-board diagnostic systems: detection of catalytic converter shutdown temperature
- Monitoring of air injection systems used to shorten the cold start period on petrol engine vehicles
- Detection of temperature window to ensure maximum catalyst efficiency
- Measurement of exhaust gas temperature EGR

Features and advantages

- Single-tube sensor structure for reduced volume size
- High responsiveness due to the sensor and moulded thermistor
- Withstands engine vibrations
- Detects temperature from -40 to 850 degrees Celsius

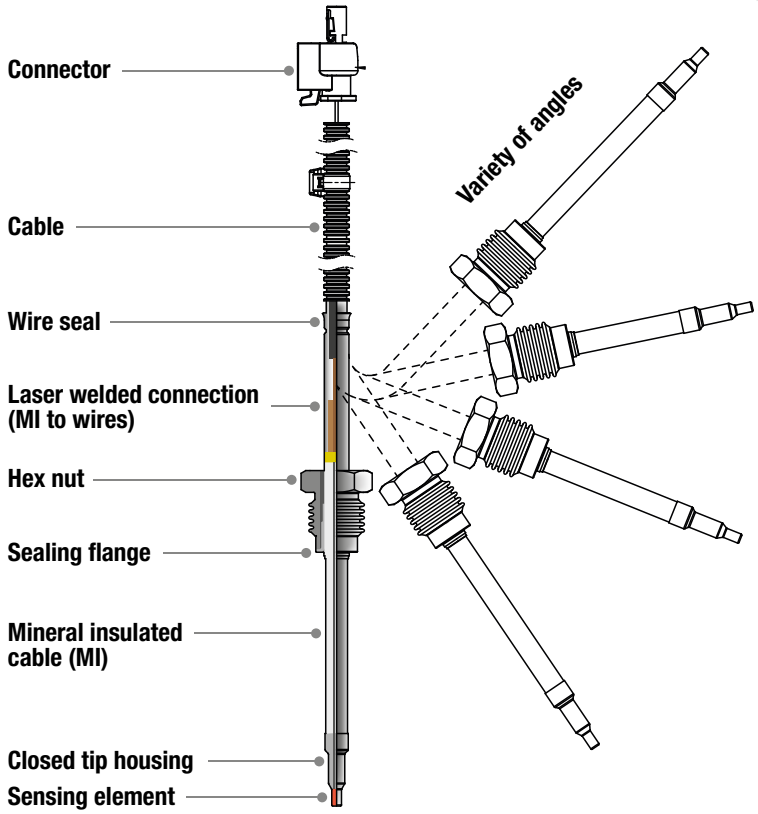

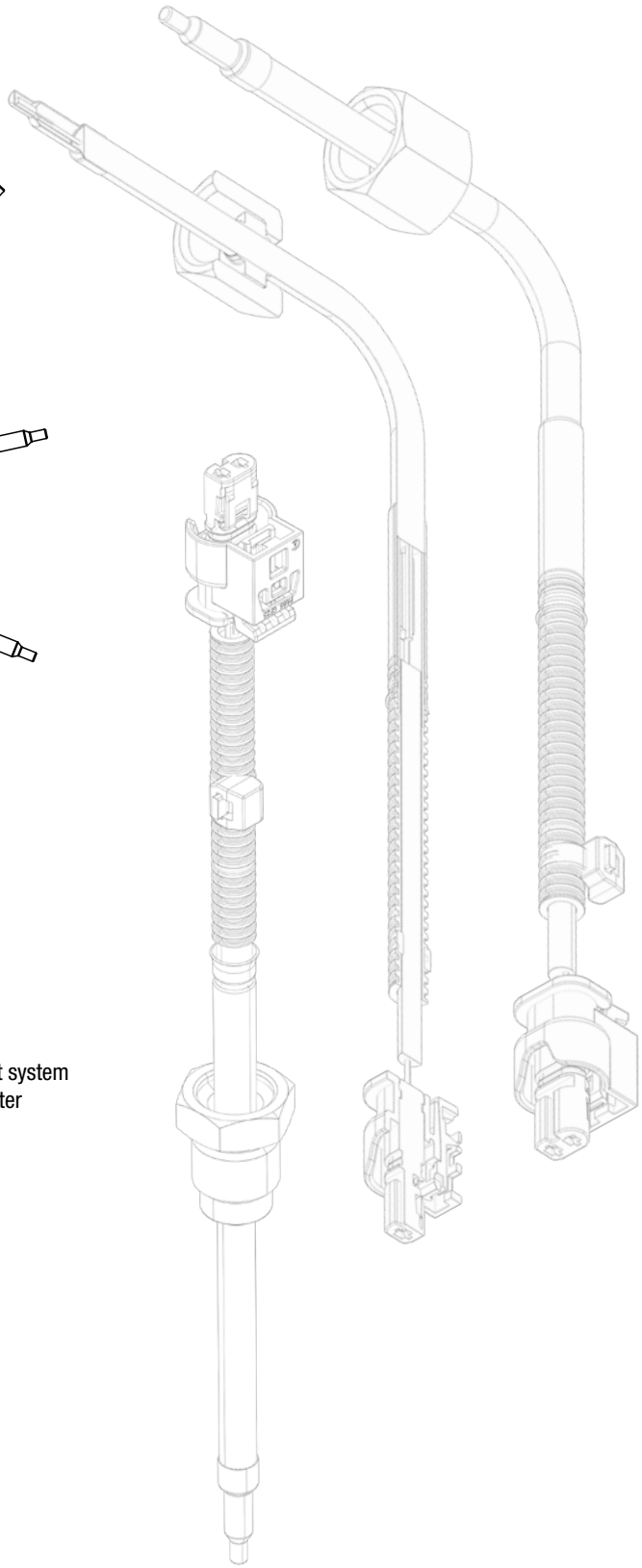

Benefits of EGT sensors

Benefits of a correctly functioning EGT sensor:

- Cleaner exhaust gases, with a reduction of nitrogen oxide (NOx) from the exhaust system
- Improved fuel consumption used in the regeneration (self-cleaning) of the DPF filter
- Extended lifespan of the catalytic converter through temperature control, which prevents it from overheating

Drawbacks of a faulty sensor

Faulty temperature sensors can cause:

- Unnecessary filter regeneration, leading to a reduction of the filter's lifespan
- Energy losses, if the sensor doesn't detect filter saturation level
- Dashboard light for particulate filter and flashing preheat light
- Deterioration of turbocharger, DOC, SCR and DPF components
- Increased oil consumption
- Increased CO, NOx and HC emission levels

INFORMACIÓN TÉCNICA

SENSORES DE TEMPERATURA DE GASES DE ESCAPE FAE

El EGTS detecta la temperatura de los gases de escape, la convierte en un voltaje y envía esa señal de tensión a la ECU del motor para controlar las condiciones del motor y reducir eficazmente las emisiones.

En los motores de gasolina, si el sensor detecta temperaturas excesivas, la ECU reducirá la temperatura bajando la presión de sobrealimentación mientras que, en los motores diésel, el sensor se usa para monitorear la temperatura del filtro de partículas diésel (DPF) para determinar la temperatura exacta para la regeneración.

¿Dónde se encuentran dentro del vehículo?

Los sensores EGT pueden encontrarse en múltiples puntos del sistema de escape del vehículo. Dado que se utilizan para supervisar las temperaturas de los gases de escape y proteger los sistemas críticos contra el sobrecalentamiento o los fallos, estos sensores se encuentran generalmente cerca de estos componentes críticos del sistema. Por ejemplo, puede haber uno o más sensores EGT situados cerca de la válvula EGR, el turbo y el filtro de partículas diésel para garantizar la eficacia adecuada del sistema.

A - Antes y después del turbocompresor (Turbo)
El sensor EGT alrededor del turbocompresor es para verificar que la temperatura del componente haya descendido a alrededor de 150 °C a 200 °C para que funcione correctamente. Mientras tanto, monitoreando la temperatura del componente en caso de sobrecalentamiento.

B - Antes y después del catalizador de oxidación diésel (DOC)
El sensor EGT alrededor del catalizador de oxidación diésel es para monitorear la temperatura de escape de entrada con una temperatura mínima de 200°C para comenzar a funcionar. Mientras tanto, monitorear la salud del componente, como DOC obstruido y en caso de sobrecalentamiento.

C - Antes y después del filtro de partículas diésel (DPF)
El sensor EGT alrededor del filtro de partículas diésel (DPF) es para verificar que el proceso de regeneración del DPF esté completo y sea efectivo. Mientras tanto, monitorear la salud del componente, como DPF obstruido y en caso de sobrecalentamiento.

D - Antes y después de la reducción catalítica selectiva (SCR)
El sensor EGT alrededor de la reducción catalítica selectiva (SCR) es para monitorear la temperatura del escape de entrada que requirió cierta temperatura alrededor de 200 °C a 400 °C para comenzar a funcionar y el escape de salida se ha tratado adecuadamente.

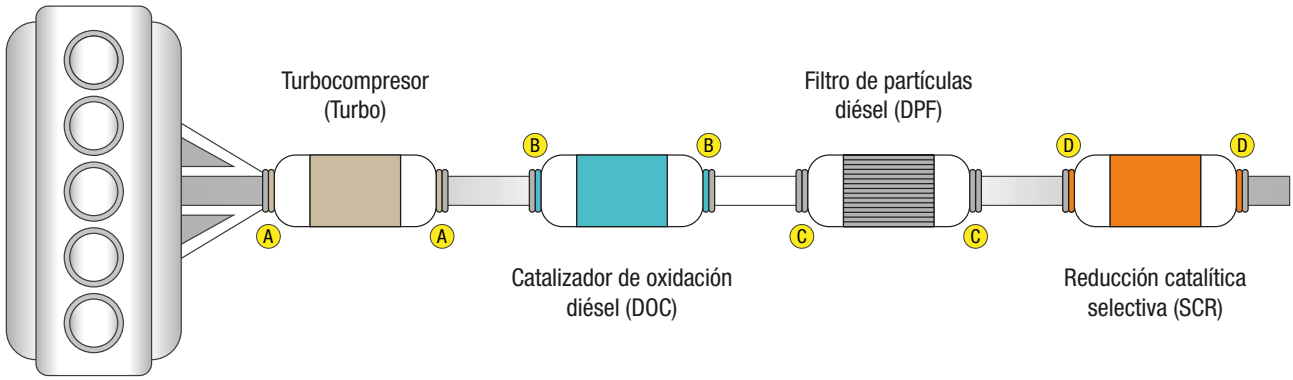

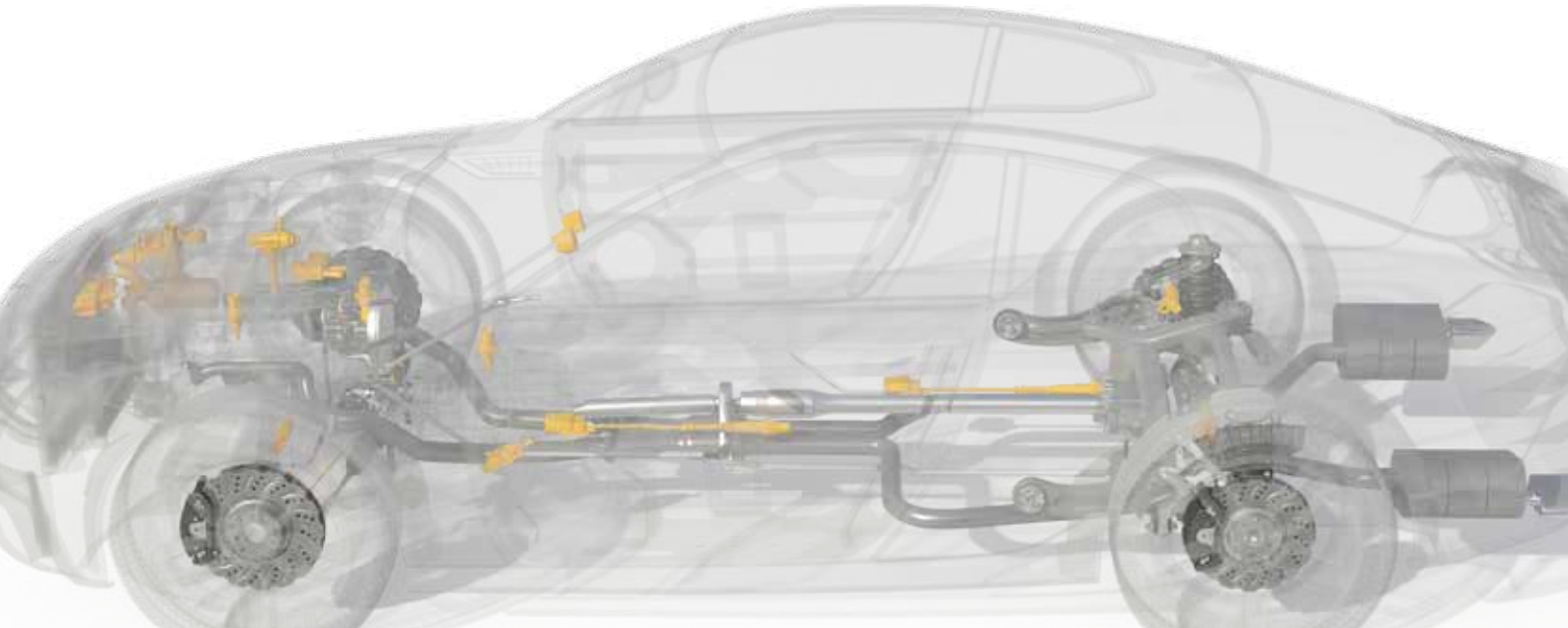

INFORMACIÓN TÉCNICA

Aplicaciones típicas

- Control y monitorización del filtro de partículas diésel en vehículos diésel
- Supervisión de los catalizadores SCR para motores diésel de gran potencia
- Protección de componentes sensibles a la temperatura (por ejemplo, el turbocompresor)
- Integrado en sistemas de diagnóstico a bordo: detección de la temperatura de apagado de los catalizadores
- Monitorización de los sistemas de inyección de aire que sirven para acortar el periodo de arranque en frío en los vehículos con motor de gasolina
- Detección de la ventana de temperatura para garantizar la máxima eficiencia de los catalizadores
- Medición de la temperatura de los gases de escape EGR

Características y ventajas

- Estructura de la pieza de detección de un solo tubo para un tamaño de volumen reducido
- Alta capacidad de respuesta gracias a la pieza de detección y al termistor moldeado
- Soporta las vibraciones del motor
- Detecta la temperatura de -40 a 850 grados Celsius

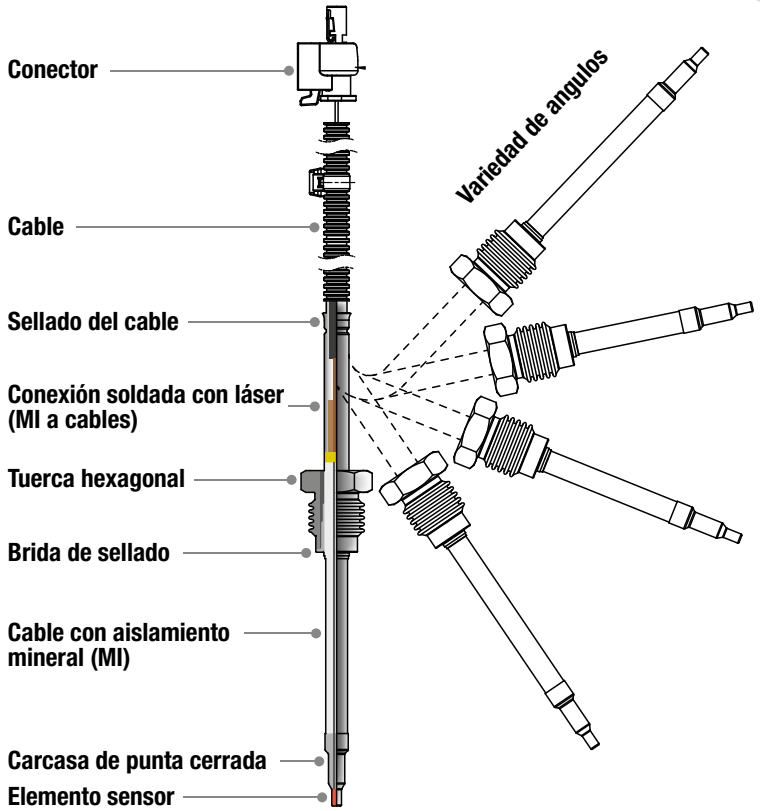

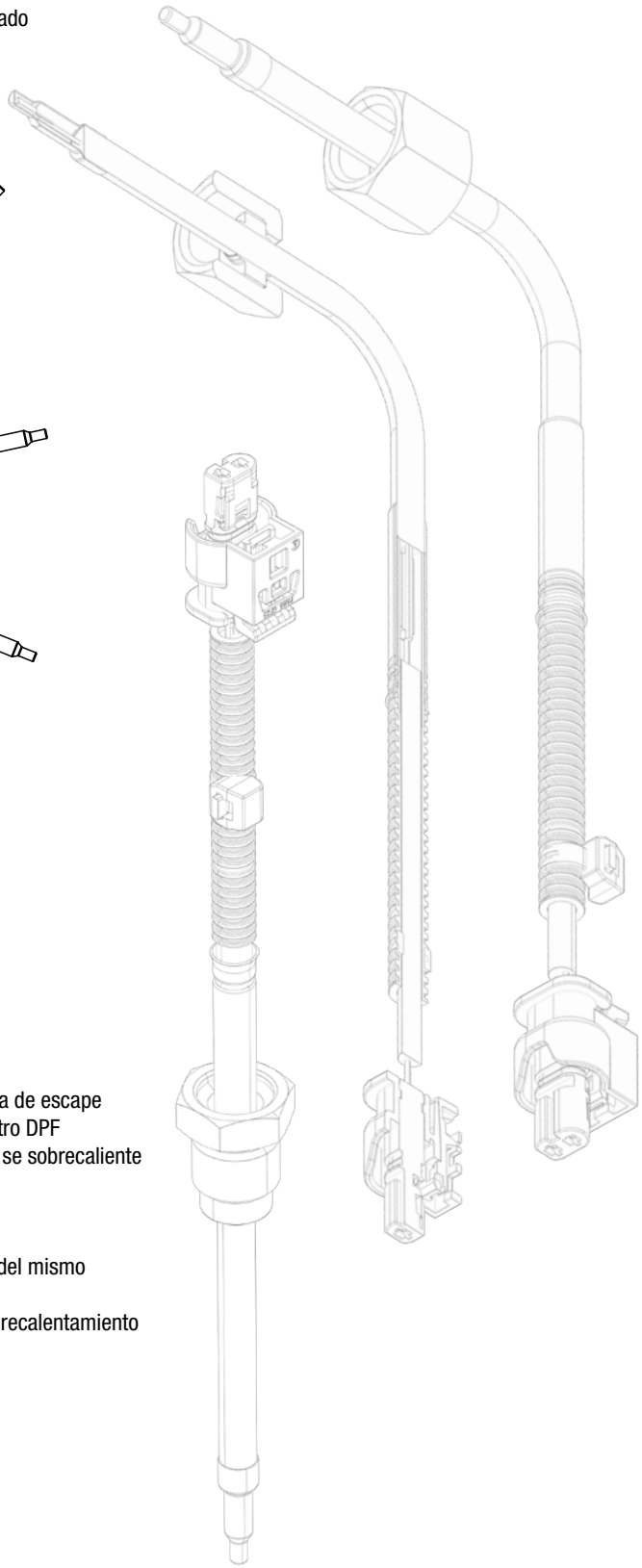

Beneficios de los sensores EGT

Beneficios del correcto funcionamiento de los sensores EGT:

- Gases de escape más limpios, reducción del óxido de nitrógeno (NOx) del sistema de escape
- Mejor consumo de combustible utilizado en la regeneración (autolimpieza) del filtro DPF
- Extender la vida útil del catalizador controlando su temperatura, lo que evita que se sobrecaliente

Mal funcionamiento

El mal funcionamiento de las sondas de temperatura puede provocar:

- Regeneración innecesaria del filtro, lo que conlleva una reducción de la vida útil del mismo
- Pérdidas de energía si el sensor no detecta el nivel de saturación del filtro
- Luz del tablero de instrumentos para el filtro de partículas y luz intermitente de precalentamiento
- Deterioro de los componentes del turbocompresor, DOC, SCR y DPF
- Aumento del consumo de aceite
- Aumento de los niveles de emisión de CO, NOx y HC

INFORMATION TECHNIQUE

CAPTEURS DE TEMPERATURE DES GAZ D'ECHAPPEMENT FAE

L'EGTS détecte la température des gaz d'échappement, la convertit en une tension et envoie ce signal de tension à l'ECU du moteur pour surveiller les conditions du moteur et réduire efficacement les émissions.

Dans les moteurs à essence, si le capteur détecte des températures excessives, l'ECU réduira la température en diminuant la pression de suralimentation tandis que, dans les moteurs diesel, le capteur est utilisé pour surveiller la température du filtre à particules diesel (FPD) afin de déterminer la température exacte pour la régénération.

Où se trouvent-ils à l'intérieur du véhicule ?

Les capteurs EGT peuvent être situés à plusieurs endroits du système d'échappement du véhicule. Étant donné qu'ils servent à surveiller la température des gaz d'échappement et à protéger les systèmes critiques contre la surchauffe ou les pannes, ces capteurs sont généralement situés près de ces composants critiques du système. Par exemple, un ou plusieurs capteurs EGT peuvent être situés près de la vanne EGR, du turbocompresseur et du filtre à particules diesel afin de garantir l'efficacité du système.

A - Avant et après le turbocompresseur (Turbo)
Le capteur EGT autour du turbocompresseur sert à vérifier que la température du composant a baissé à environ 150 °C à 200 °C pour un bon fonctionnement. Pendant ce temps, il surveille la température du composant en cas de surchauffe.

B - Avant et après le catalyseur d'oxydation diesel (DOC)
Le capteur EGT situé autour du catalyseur d'oxydation diesel doit surveiller la température d'entrée des gaz d'échappement, avec une température minimale de 200°C pour commencer à fonctionner. Entre-temps, surveillez l'état de santé de l'élément, par exemple en cas de colmatage du DOC et en cas de surchauffe.

C - Avant et après le filtre à particules diesel (DPF)
Le capteur EGT autour du filtre à particules diesel (DPF) sert à vérifier que le processus de régénération du DPF est complet et efficace. Entre-temps, surveillez l'état de santé du composant, par exemple en cas de colmatage du DPF et en cas de surchauffe.

D - Avant et après la réduction catalytique sélective (SCR)
Le capteur EGT autour de la réduction catalytique sélective (SCR) sert à surveiller la température des gaz d'échappement d'entrée, qui doit atteindre une certaine température comprise entre 200 °C et 400 °C pour commencer à fonctionner, et les gaz d'échappement de sortie ont été correctement traités.

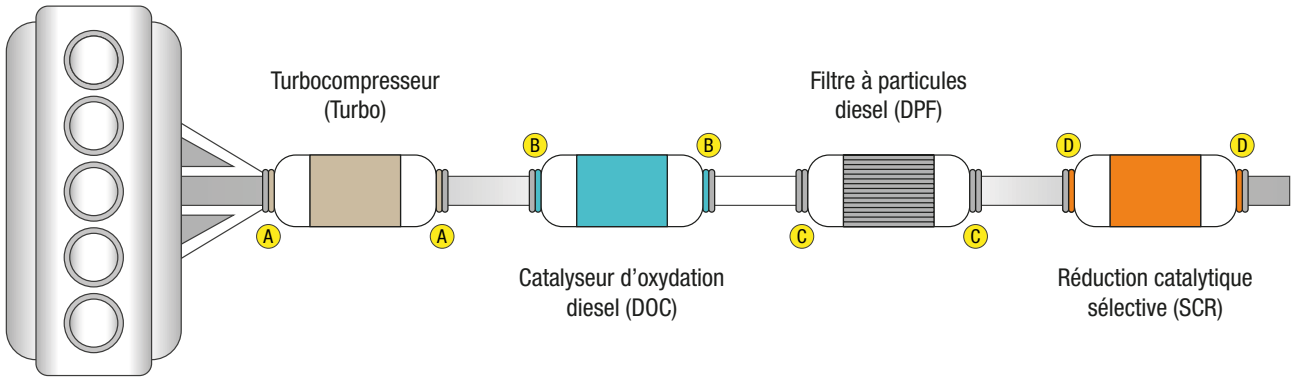

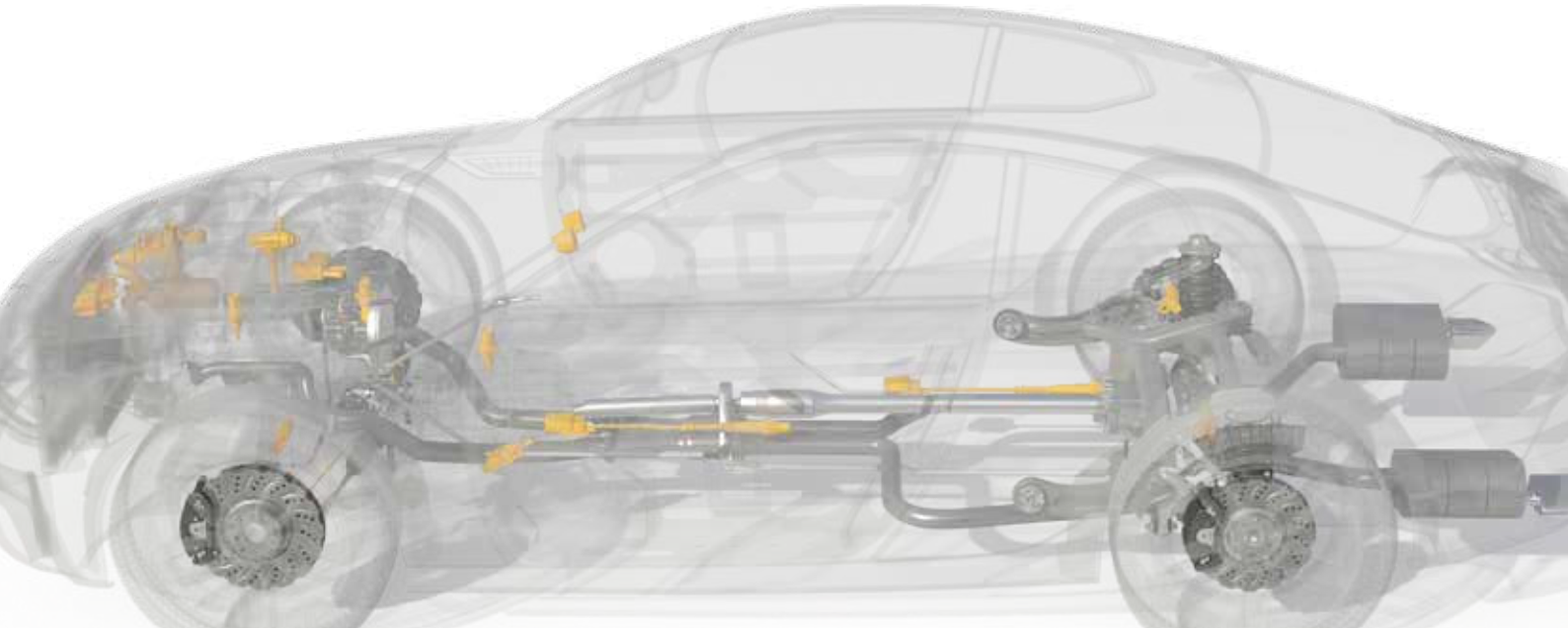

INFORMATION TECHNIQUE

Applications typiques
- Contrôle et surveillance du filtre à particules des véhicules diesel
- Surveillance des convertisseurs catalytiques SCR pour moteurs diesel lourds
- Protection des composants sensibles à la température (par exemple, le turbocompresseur)
- Intégré dans les systèmes de diagnostic embarqués : détection de la température d'arrêt du convertisseur catalytique
- Surveillance des systèmes d'injection d'air qui servent à raccourcir la période de démarrage à froid des véhicules à moteur à essence
- Détection de la fenêtre de température pour assurer une efficacité maximale du catalyseur
- Mesure de la température des gaz d'échappement EGR

Caractéristiques et avantages
- Structure de la pièce de détection monotube pour un volume réduit
- Grande réactivité grâce à la pièce de détection et à la thermistance moulée
- Résiste aux vibrations du moteur
- Détecte la température de -40 à 850 degrés Celsius

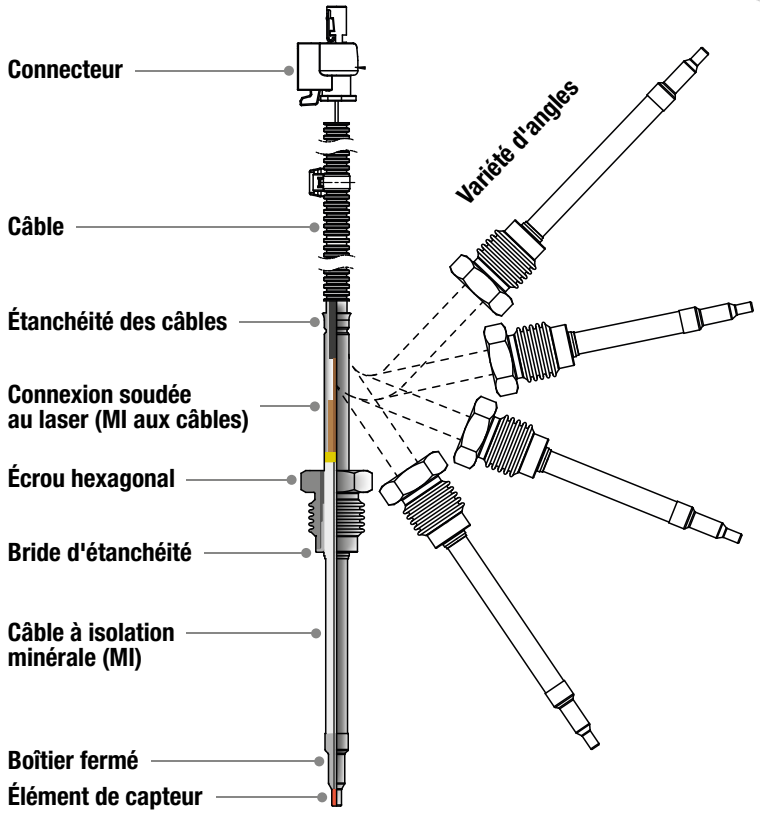

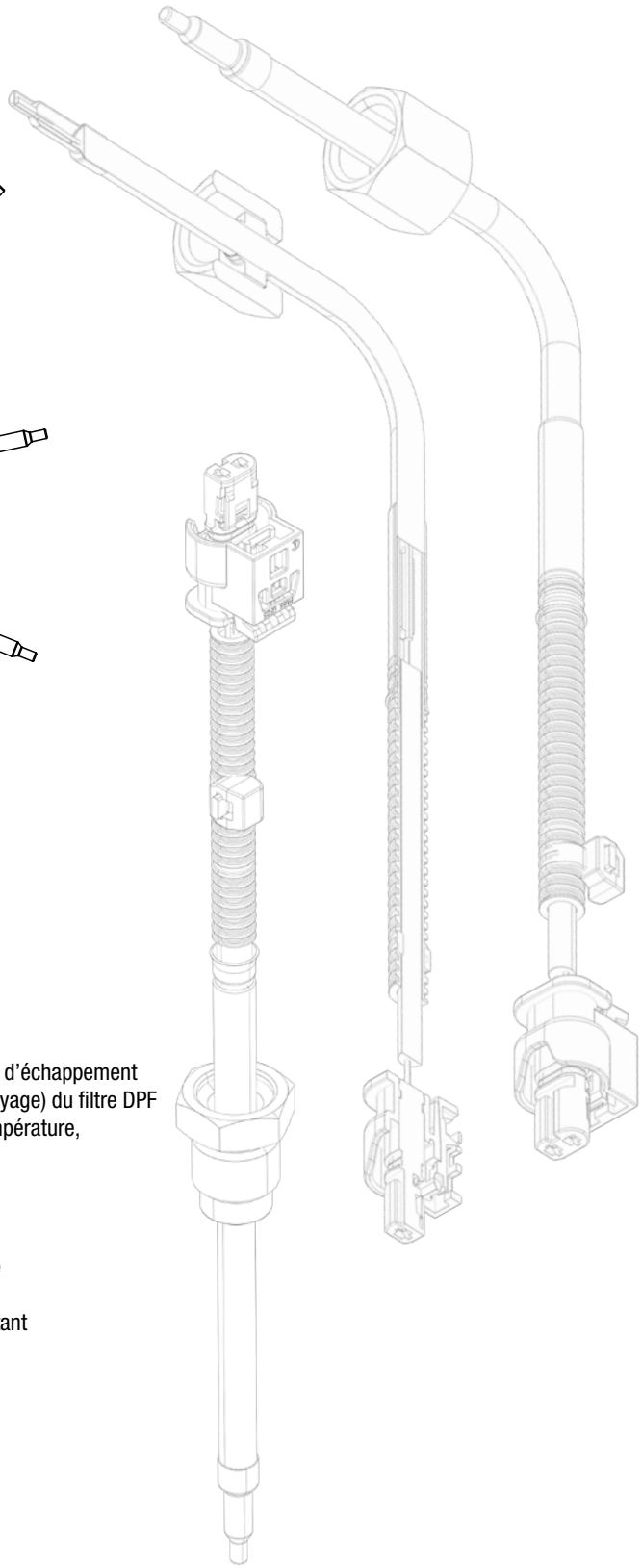

Avantages des capteurs EGT :
Avantages du bon fonctionnement des capteurs EGT :
- Gaz d'échappement plus propres, réduction de l'oxyde d'azote (NOx) du système d'échappement
- Amélioration de la consommation de carburant lors de la régénération (autonettoyage) du filtre DPF
- Prolongation de la durée de vie du convertisseur catalytique en contrôlant sa température, ce qui l'empêche de surchauffer

Mauvais fonctionnement :
Un mauvais fonctionnement des sondes de température peut entraîner:
- Régénération inutile du filtre, entraînant une réduction de la durée de vie du filtre
- Pertes d'énergie si le capteur ne détecte pas le niveau de saturation du filtre
- Voyant du tableau de bord du filtre à particules et voyant de préchauffage clignotant
- Détérioration des composants du turbocompresseur, DOC, SCR et DPF
- Augmentation de la consommation d'huile
- Augmentation des niveaux d'émission de CO, NOx et HC

NOTES
NOTAS
REMARQUES

FAE

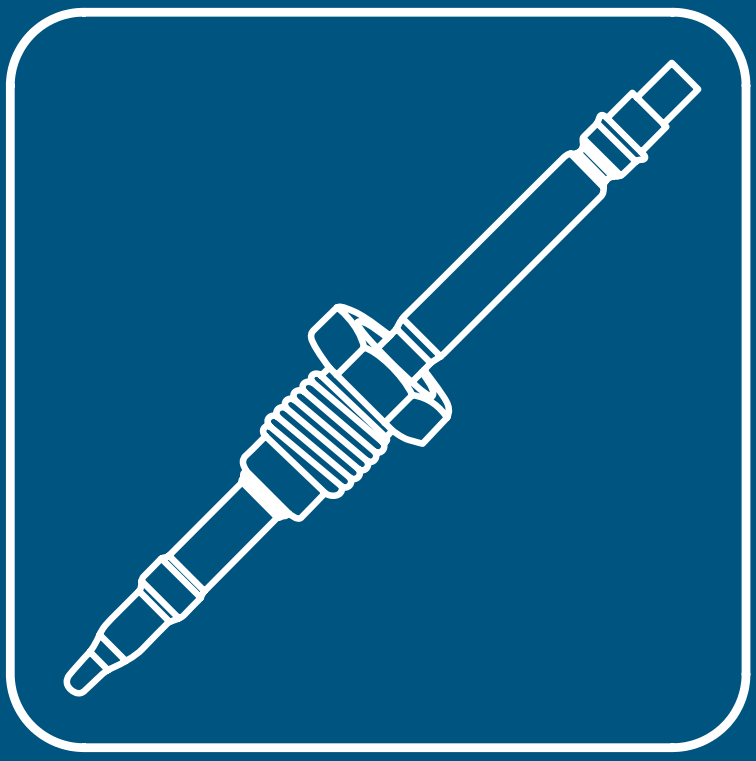

EXHAUST GAS TEMPERATURE SENSORS
SENSORES DE TEMPERATURA DE GASES DE ESCAPE
CAPTEURS DE TEMPÉRATURE DES GAZ D'ÉCHAPPEMENT

Ref. FAE

Suitable / Reemplaza:
Cross references
Cruce de referencias
Tableau des equivalences

CONNECTION
CONEXIÓN
CONNEXION

L1/L2 LENGTH
LONGITUD
LONGUEUR

THREAD
FIJACIÓN
FIXATION

SENSOR
SENSOR
CAPTEUR
ANGLE - ÁNGULO

Ref. 68001

Suitable / Reemplaza:

Porsche	03G 906 088 AN
Vag	03G 906 088 A
	03G 906 088 AM
	03G 906 088 AN
	03G 906 088 AT
	03G 906 088 J
	03L 906 088 BS

L1 / L2
656 / 25

14x1,5

PTC
35º

Ref. FAE

The FAE references that are highlighted in green are those whose applications are most respectful to the environment, vehicles that run on compressed natural gas (CNG), liquefied petroleum gas (LPG), ethanol or electricity, as they do not contribute to an increase in pollution.
Destacamos con la señal verde todas aquellas referencias **FAE** que tienen las aplicaciones más respetuosas con el medioambiente, vehículos que funcionan con gas natural comprimido (GNC), gas licuado del petróleo (GLP), etanol o eléctricos, ya que ayudan a no aumentar la contaminación.
Avec le signal vert, nous mettons en avant toutes ces références **FAE** qui disposent des applications les plus respectueuses de l'environnement, les véhicules fonctionnant au gaz naturel comprimé (GNC), au gaz de pétrole liquéfié (GPL), à l'éthanol ou les véhicules électriques, puisqu'ils évitent l'augmentation de la pollution.

SYMBOLS / SÍMBOLOS / SYMBOLES

Exhaust gas temperature sensors
Sensores de temperatura de gases de escape
Capteurs de température des gaz d'échappement

Type of connection
Tipo de conexión
Type de connexion

Thread
Fijación y rosca
Fixation et fillet

LENGHTS / LONGITUDES / LONGEURS

L1
Cable length
Longitud del cable
Longueur de câble

L2
Sensor tip length
Longitud de la punta del sensor
Longueur de la pointe du capteur

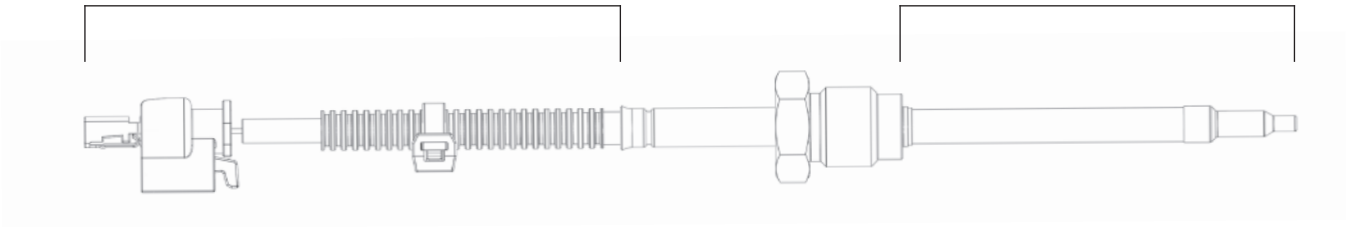

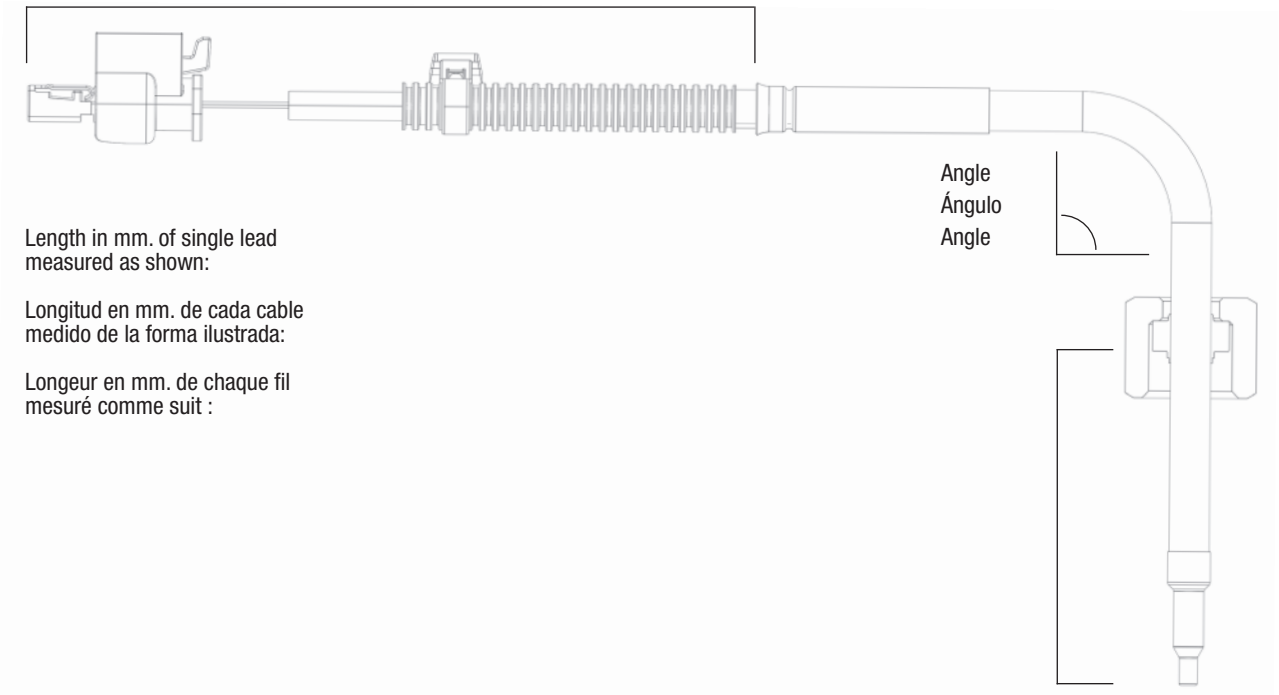

Length in mm. of single lead measured as shown:

Longitud en mm. de cada cable medido de la forma ilustrada:

Longeur en mm. de chaque fil mesuré comme suit :

Ref. 68001

Suitable / Reemplaza:

Porsche	03G 906 088 AN
Vag	03G 906 088 A
	03G 906 088 AM
	03G 906 088 AN
	03G 906 088 AT
	03G 906 088 J
	03L 906 088 BS

L1 / L2
656 / 25

14x1,5

PTC
35º

Ref. 68002

Suitable / Reemplaza:

Vag	03L 906 088 AJ
	03L 906 088 J
	03L 906 088 N
Volkswagen	03L 906 088 B
	03L 906 088 BA
	03L 906 088 C

L1 / L2
646 / 35

14x1,5

PTC
100º

Ref. 68003

Suitable / Reemplaza:

Vag	03L 906 088 AK
	03L 906 088 CC
	03L 906 088 M

L1 / L2
766 / 35

14x1,5

PTC
0º

Ref. 68004

Suitable / Reemplaza:

Mercedes	000 905 37 08
	000 905 40 05
	A 000 905 37 08
	A 000 905 40 05

L1 / L2
342,3 / 50

14x1,5

PTC
90º

Ref. 68005

Suitable / Reemplaza:

Audi	03G 906 088 D
Seat	03G 906 088 D
Skoda	03G 906 088 D
Volkswagen	03G 906 088 D

L1 / L2
766 / 35

14x1,5

PTC
0º

Ref. 68006

Suitable / Reemplaza:

Case IH	5801291815
Iveco	504102603
	504109529
	5801291814
	5801291815
	5801455940
	5801455941

L1 / L2
667 / 50

14x1,5

PTC
90º

Ref. 68007

Suitable / Reemplaza:

Vag	04L 906 088
	04L 906 088 AE
	04L 906 088 DQ
	04L 906 088 HT

L1 / L2
566 / 25

14x1,5

PTC
45º

Ref. 68009

Suitable / Reemplaza:

Daf	1677125
	1689812
	1810691

L1 / L2
1028 / 50

14x1,5

PTC
0º

Ref. 68011

Suitable / Reemplaza:

Audi	03G 906 088 K
Seat	03G 906 088 K
Skoda	03G 906 088 K
Volkswagen	03G 906 088 K

L1 / L2
446 / 35

14x1,5

PTC
90º

Ref. 68012

Suitable / Reemplaza:

Chrysler	68014084AA
	68029988AA
	68054683AA
	68054683AB
Mercedes	A 000 905 43 05
	A 000 905 68 04
	A 005 153 79 28
	A 007 153 47 28
	A 007 153 84 28
	A 008 153 27 28
	A 007 153 90 28

L1 / L2
397,3 / 50

14x1,5

PTC
90º

FAE

Ref. 68013

Suitable / Reemplaza:

Audi	04L 906 088 DA
Seat	04L 906 088 DA
Skoda	04L 906 088 DA
Volkswagen	04L 906 088 DA

L1 / L2
896 / 50

14x1,5

PTC
0º

Ref. 68014

Suitable / Reemplaza:

Audi	04L 906 088 B
Seat	04L 906 088 B
Skoda	04L 906 088 B
Volkswagen	04L 906 088 B

L1 / L2
666 / 25

14x1,5

PTC
0º

Ref. 68015

Suitable / Reemplaza:

Mercedes	A 000 905 86 04
	A 005 153 18 28
	A 005 153 41 28
	A 007 153 65 28
	A 007 153 75 28
	A 008 153 34 28

L1 / L2
487,3 / 50

14x1,5

PTC
90º

Ref. 68016

Suitable / Reemplaza:

Volkswagen	03G 906 088
	03L 906 088 BP
	03L 906 088 HJ

L1 / L2
546 / 35

14x1,5

PTC
90º

Ref. 68017

Suitable / Reemplaza:

Audi	04L 906 088 E
Seat	04L 906 088 E
Skoda	04L 906 088 E
Volkswagen	04L 906 088 E

L1 / L2
881 / 35

14x1,5

PTC
0º

Ref. 68018

Suitable / Reemplaza:

Mercedes	A 000 905 88 04
	A 005 153 22 28
	A 007 153 34 28
	A 007 153 95 28

L1 / L2
597,3 / 70

14x1,5

PTC
0º

Ref. 68019

Suitable / Reemplaza:

Audi	04L 906 088 BD
Seat	04L 906 088 BD
Skoda	04L 906 088 BD
Volkswagen	04L 906 088 BD

L1 / L2
676 / 30

14x1,5

PTC
120º

Ref. 68021

Suitable / Reemplaza:

Vag	03L 906 088 AA
	03L 906 088 DE
	03L 906 088 GR
	03L 906 088 HE

L1 / L2
526 / 35

14x1,5

PTC
90º

Ref. 68022

Suitable / Reemplaza:

Mercedes	001 905 30 00
	A 001 905 30 00

L1 / L2
1101 / 70

14x1,5

PTC
0º

Ref. 68023

Suitable / Reemplaza:

Mercedes	000 905 44 05
	005 153 80 28
	007 153 85 28
	A 000 905 44 05
	A 005 153 80 28
	A 007 153 85 28

L1 / L2
427,3 / 35

14x1,5

PTC
0º

Ref. 68024

Suitable / Reemplaza:

Audi	03G 906 088 AF
	03L 906 088 HL
Seat	03G 906 088 AF
	03L 906 088 HL
Skoda	03G 906 088 AF
	03L 906 088 HL
Volkswagen	03G 906 088 AF
	03L 906 088 HL

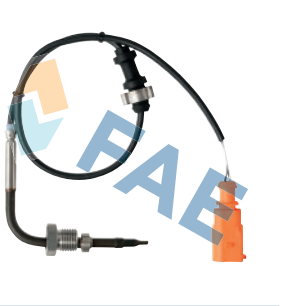

L1 / L2
501 / 35

14x1,5

PTC
90º

Ref. 68025

Suitable / Reemplaza:

Audi	058 906 088 AE
	059 906 088 AE

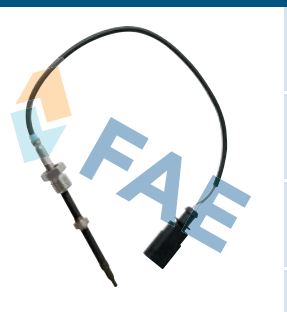

L1 / L2
336 / 50

14x1,5

PTC
0º

Ref. 68026

Suitable / Reemplaza:

Volkswagen	03G 906 088 B
	03L 906 088 CE
	03L 906 088 HM

L1 / L2
506 / 35

14x1,5

PTC
0º

Ref. 68027

Suitable / Reemplaza:

Mercedes	000 905 64 04
	008 153 22 28
	A 000 905 64 04
	A 008 153 22 28

L1 / L2
327,3 / 40

14x1,5

PTC
60º

Ref. 68028

Suitable / Reemplaza:

Seat	03G 906 088 F
Volkswagen	03G 906 088 F

L1 / L2
876 / 35

14x1,5

PTC
0º

Ref. 68029

Suitable / Reemplaza:

Mercedes	000 905 52 05
	008 153 41 28
	A 000 905 52 05
	A 008 153 41 28

L1 / L2
347,3 / 50

14x1,5

PTC
90º

Ref. 68030

Suitable / Reemplaza:

Audi	04L 906 088 CP
Volkswagen	04L 906 088 CP

L1 / L2
766 / 30

14x1,5

PTC
0º

Ref. 68031

Suitable / Reemplaza:

Mercedes	A 000 905 67 04
	A 005 153 66 28
	A 007 153 66 28
	A 008 153 37 28
	A 008 153 37 29

L1 / L2
257,3 / 25

14x1,5

PTC
90º

Ref. 66033

Suitable / Reemplaza:

Audi	03L 906 088 E
	4H0 906 088 AB
Porsche	4H0 906 088 AB
Volkswagen	4H0 906 088 AB

L1 / L2
236 / 35

14x1,5

PTC
0º

Ref. 66034

Suitable / Reemplaza:

Mercedes	000 905 52 02
	000 905 89 04
	A 000 905 52 02
	A 000 905 89 04

L1 / L2
336 / 50

14x1,5

PTC
0º

FAE

Ref. 68035

Suitable / Reemplaza:

Mercedes 000 905 43 06
000 905 72 04
001 905 06 00
A 000 905 43 06
A 000 905 72 04
A 001 905 06 00

L1 / L2
746 / 35

14x1,5

PTC
45º

Ref. 68036

Suitable / Reemplaza:

Seat 03P 906 088 C
03P 906 088 E
Skoda 03P 906 088 C
03P 906 088 E
Vag 03L 906 088 FG
03L 906 088 P
Volkswagen 03P 906 088 C
03P 906 088 E

L1 / L2
426 / 50

14x1,5

PTC
80º

Ref. 68037

Suitable / Reemplaza:

Fiat 55184538
55252502
55271706

L1 / L2
230,2 / 50

14x1,5

PTC
90º

Ref. 68038

Suitable / Reemplaza:

Alfa Romeo 51790443
55207978
Fiat 55207978
G.M. 55557600
Opel 55557600
855425

L1 / L2
1560 / 50

14x1,5

PTC
90º

Ref. 68039

Suitable / Reemplaza:

Mercedes 005 153 11 28
007 153 63 28
A 005 153 11 28
A 007 153 63 28

L1 / L2
412,3 / 70

14x1,5

PTC
0º

Ref. 68040

Suitable / Reemplaza:

Mercedes 000 905 43 06
000 905 72 04
001 905 06 00
A 000 905 43 06
A 000 905 72 04
A 001 905 06 00

L1 / L2
461 / 50

14x1,5

PTC
0º

Ref. 68041

Suitable / Reemplaza:

Mercedes 000 905 07 01
000 905 70 04
000 905 85 01
A 000 905 07 01
A 000 905 70 04
A 000 905 85 01

L1 / L2
762,9 / 50

14x1,5

PTC
60º

Ref. 68042

Suitable / Reemplaza:

Volkswagen 03K 906 088 A
03L 906 088 DF
03L 906 088 DP
03L 906 088 FF
03L 906 088 HG

L1 / L2
626 / 50

14x1,5

PTC
110º

Ref. 68043

Suitable / Reemplaza:

Mercedes 000 905 65 04
001 905 07 00
007 153 94 28
A 000 905 65 04
A 001 905 07 00
A 007 153 94 28

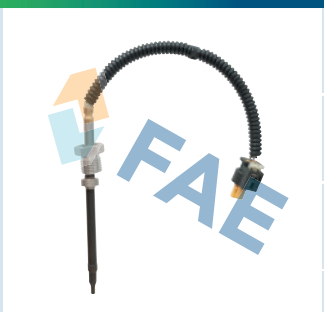

L1 / L2
197,3 / 70

14x1,5

PTC
0º

Ref. 68044

Suitable / Reemplaza:

Fiat 55197011

L1 / L2
1165,2 / 50

14x1,5

PTC
90º

Ref. 68045

Suitable / Reemplaza:

Volkswagen 03L 906 088 DH
03L 906 088 EF

L1 / L2
706 / 35

14x1,5

PTC
100º

Ref. 68046

Suitable / Reemplaza:

Mercedes 000 905 37 05
005 153 10 28
007 153 62 28
A 000 905 37 05
A 005 153 10 28
A 007 153 62 28

L1 / L2
1082,3 / 70

14x1,5

PTC
0º

Ref. 68047

Suitable / Reemplaza:

G.M. 55190616
Opel 55355404
5855410
855410
Saab 55 190 616

L1 / L2
275,2 / 35

14x1,5

PTC
0º

Ref. 68048

Suitable / Reemplaza:

Audi 04L 906 088 K
Seat 04L 906 088 K
Skoda 04L 906 088 K
Volkswagen 04L 906 088 K

L1 / L2
666 / 25

14x1,5

PTC
90º

Ref. 68049

Suitable / Reemplaza:

Seat 03G 906 088 AC
Skoda 03G 906 088 AC
Volkswagen 03G 906 088 AC

L1 / L2
406 / 35

14x1,5

PTC
45º

Ref. 68050

Suitable / Reemplaza:

Mercedes 005 153 92 28
007 153 91 28
A 005 153 92 28
A 007 153 91 28

L1 / L2
757,3 / 50

14x1,5

PTC
120º

Ref. 68051

Suitable / Reemplaza:

Mercedes 001 905 24 00
A 001 905 24 00

L1 / L2
156 / 25

14x1,5

PTC
0º

Ref. 68052

Suitable / Reemplaza:

Mercedes 007 153 92 28
008 153 28 28
A 007 153 92 28
A 008 153 28 28

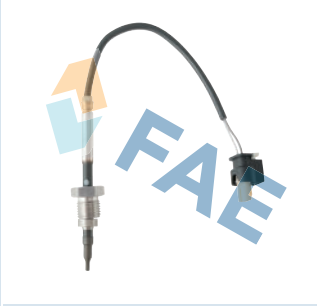

L1 / L2
187,9 / 25

14x1,5

PTC
0º

Ref. 68053

Suitable / Reemplaza:

Mercedes 001 905 09 00
A 001 905 09 00

L1 / L2
291 / 25

14x1,5

PTC
90º

Ref. 68054

Suitable / Reemplaza:

Mercedes 005 153 91 28
007 153 09 28
007 153 89 28
A 005 153 91 28
A 007 153 09 28
A 007 153 89 28

L1 / L2
597,3 / 50

14x1,5

PTC
60º

FAE

Ref. 68056

Suitable / Reemplaza:

Seat	045 906 088 H
	045 906 088 J
Skoda	045 906 088 H
	045 906 088 J
Volkswagen	045 906 088 H
	045 906 088 J

L1 / L2
731 / 35

14x1,5

PTC
60º

Ref. 68057

Suitable / Reemplaza:

Volkswagen	03L 906 088 AT

L1 / L2
876 / 35

14x1,5

PTC
0º

Ref. 68058

Suitable / Reemplaza:

Seat	045 906 088 D
Skoda	045 906 088 D
Volkswagen	045 906 088 D

L1 / L2
696 / 35

14x1,5

PTC
45º

Ref. 68059

Suitable / Reemplaza:

Man	04L 906 088 BF
Seat	04L 906 088 BF
Skoda	04L 906 088 BF
Volkswagen	04L 906 088 BF
	04L 906 088 CG

L1 / L2
696 / 30

14x1,5

PTC
0º

Ref. 68060

Suitable / Reemplaza:

Mercedes	A 000 905 41 08
	A 000 905 48 00
	A 000 905 90 04
	A 001 905 29 00
	A 007 153 35 28
	A 007 153 96 28

L1 / L2
436 / 70

14x1,5

PTC
0º

Ref. 68061

Suitable / Reemplaza:

Alfa Romeo	55204765
Fiat	55204765

L1 / L2
635,2 / 25

14x1,5

PTC
0º

Ref. 68062

Suitable / Reemplaza:

Skoda	038 906 088 B
Volkswagen	038 906 088 B

L1 / L2
1196 / 50

14x1,5

PTC
90º

Ref. 68063

Suitable / Reemplaza:

Seat	045 906 088 C
	045 906 088 G
Skoda	045 906 088 C
	045 906 088 G
Volkswagen	045 906 088 C
	045 906 088 G

L1 / L2
726 / 35

14x1,5

PTC
60º

Ref. 68064

Suitable / Reemplaza:

Seat	045 906 088 F
Skoda	045 906 088 F
Volkswagen	045 906 088 F

L1 / L2
756 / 35

14x1,5

PTC
45º

Ref. 68067

Suitable / Reemplaza:

Volvo	30713642
	30713642AD
	31293032
	31370465
	31431047
	50436389

L1 / L2
422 / 50

14x1,5

PTC
90º

Ref. 68068

Suitable / Reemplaza:

Audi	057 906 088 J
	07Z 906 088 A
Porsche	958 606 288 50
Volkswagen	057 906 088 G
	07Z 906 088 A

L1 / L2
786 / 50

14x1,5

PTC
90º

Ref. 68069

Suitable / Reemplaza:

Opel	55564977
	855457

L1 / L2
215,2 / 50

14x1,5

PTC
0º

Ref. 68071

Suitable / Reemplaza:

Mercedes	000 905 36 08
	000 905 39 05
	A 000 905 36 08
	A 000 905 39 05

L1 / L2
467,3 / 50

14x1,5

PTC
0º

Ref. 68073

Suitable / Reemplaza:

Chrysler	68196128 AA
Citroën	16.09.520.380
	1618 FY
Fiat	51825673
	55215116
	55218464
Peugeot	16 09 520 380
	1618.FY

L1 / L2
370,2 / 50

14x1,5

PTC
90º

Ref. 68074

Suitable / Reemplaza:

Chrysler	6819 6129 AA
Citroën	16.095.200.80
	1618 EY
Fiat	51825674
	55211656
	55218465
Peugeot	16 095 200 80
	1618.EY

L1 / L2
565,2 / 50

14x1,5

PTC
90º

Ref. 68075

Suitable / Reemplaza:

Alfa Romeo	55257688
	55271711
Chrysler	55257688
	68254607 AA
	K68254607 AA
Fiat	55257688
	55271711
Jeep	55257688
	55271711
Lancia	55257688
	55271711

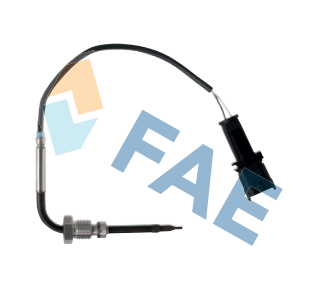

L1 / L2
230 / 50

14x1,5

PTC
90º

Ref. 68076

Suitable / Reemplaza:

Volkswagen	03K 906 088 B
	03L 906 088 HH

L1 / L2
646 / 35

14x1,5

PTC
0º

Ref. 68077

Suitable / Reemplaza:

Mercedes	000 905 87 00
	A 000 905 87 00

L1 / L2
108,2 / 70

14x1,5

PTC
0º

Ref. 68078

Suitable / Reemplaza:

Audi	04L 906 088 DH
Seat	04L 906 088 DH
Skoda	04L 906 088 DH
Volkswagen	04L 906 088 DH

L1 / L2
766 / 30

14x1,5

PTC
90º

Ref. 68079

Suitable / Reemplaza:

Audi	03G 906 088 AG
	03G 906 088 BA

L1 / L2
786 / 35

14x1,5

PTC
90º

FAE

Ref. 68080

Suitable / Reemplaza:

Alfa Romeo	51799538
	51825680
	55210402
	55218471
Citroën	16.095.205.80
	1618 SA
	55.228.787
Fiat	51799538
	51825680
	51862720
	55210402
	55218471
	55228787
Peugeot	1618.SA

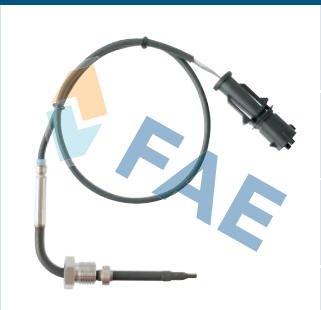

L1 / L2
485,2 / 50

14x1,5

PTC
90º

Ref. 68081

Suitable / Reemplaza:

Fiat	51825699
	51900023
	55218489
	55237922

L1 / L2
315,2 / 50

14x1,5

PTC
90º

Ref. 68082

Suitable / Reemplaza:

G.M.	55496933
	55591173
Opel	1247634
	55496933
	55591173

L1 / L2
420,2 / 35

14x1,5

PTC
120º

Ref. 68083

Suitable / Reemplaza:

Audi	059 906 088 BK
	059 906 088 M

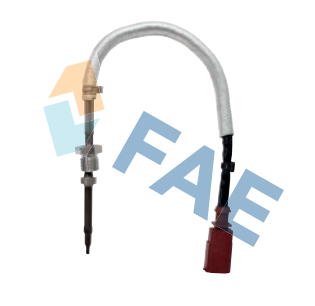

L1 / L2
266 / 50

14x1,5

PTC
0º

Ref. 68084

Suitable / Reemplaza:

Audi	059 906 088 BJ
	059 906 088 CL
Porsche	958 606 688 31
Volkswagen	059 906 088 BJ
	059 906 088 CL

L1 / L2
386 / 35

14x1,5

PTC
75º

Ref. 68086

Suitable / Reemplaza:

Fiat	51807904
	55203809
	55212787
Lancia	51807904
	55203809
	55212787

L1 / L2
855,2 / 50

14x1,5

PTC
90º

Ref. 68088

Suitable / Reemplaza:

Opel	55558578
	855412

L1 / L2
1505,2 / 50

14x1,5

PTC
90º

Ref. 68089

Suitable / Reemplaza:

Audi	8E0 906 088

L1 / L2
786 / 50

14x1,5

PTC
90º

Ref. 68090

Suitable / Reemplaza:

Audi	03G 906 088 AA
	4F0 906 088
Seat	03G 906 088 AA
	4F0 906 088
Skoda	03G 906 088 AA
	4F0 906 088
Volkswagen	03G 906 088 AA
	4F0 906 088

L1 / L2
636 / 50

14x1,5

PTC
90º

Ref. 68091

Suitable / Reemplaza:

Chevrolet	55566185
Opel	55489472
	55496932
	55566185
	5855387
	855632
Saab	55 566 185

L1 / L2
225,2 / 50

14x1,5

PTC
90º

Ref. 68092

Suitable / Reemplaza:

Audi	03L 906 088 AB
	4M0 906 088 AL
	4M0 906 088 N
Porsche	958 606 288 31
Seat	03L 906 088 AB
Volkswagen	03L 906 088 AB
	059 906 088 BS
	059 906 088 CF
	4M0 906 088 AL
	4M0 906 088 N

L1 / L2
371 / 50

14x1,5

PTC
90º

Ref. 68123

Suitable / Reemplaza:

Opel	55562408
	55566631
	5855377

L1 / L2
1155,2 / 50

14x1,5

PTC
90º

Ref. 68093

Suitable / Reemplaza:

Audi	04L 906 088 CK
	04L 906 088 DR
Volkswagen	04L 906 088 CK
	04L 906 088 DR

L1 / L2
896 / 25

14x1,5

PTC
100º

Ref. 68094

Suitable / Reemplaza:

Mercedes	A 000 905 22 05
	A 000 905 28 05
	A 000 905 79 01
	A 005 153 45 28
	A 007 153 25 28
	A 007 153 79 28
	A 007 153 98 28

L1 / L2
668 / 50

14x1,5

PTC
60º

Ref. 68096

Suitable / Reemplaza:

Chevrolet	0855432
	55574183
	855432
Opel	0855432
	55574183
	855432

L1 / L2
385 / 25

14x1,5

PTC
120º

Ref. 68097

Suitable / Reemplaza:

Audi	059 906 088 A
Porsche	955 606 688 10
Volkswagen	059 906 088 A

L1 / L2
336 / 35

14x1,5

PTC
90º

Alternative	Alternativa	Alternative
Yellow	Amarillo	Jaune
before soot particulate filter	Antes de filtro de partículos	devant le filtre à particules
before SCR catalytic converter	Antes del catalizador SCR	Avant catalyseur SCR
Year	Año	Année
Vehicle applications	Aplicaciones por vehículos	Applications pour véhicules
Bolted	Atornillado	Vissé
Blue	Azul	Bleue
Light blue	Azul claro	Bleu clair
White	Blanco	Blanche
Pin	Bornes	Bornes
Automatic Transmission	Caja de cambios automática	Boîte automatique
Manual Transmission	Caja de cambios manual	Boîte de vitesses manuelle
Sequential Manual Transmission	Caja de cambios manual, secuencial	Boîte de vitesses séquentiel
Heating	Calefacción	Chauffage
Fully automatic	Completamente automático	Entièrement automatique
With	Con	Avec
With cable	Con cable	Avec câble
With catalytic converter	Con catalizador	Avec catalyseur
With power steering	Con servo-dirección	Avec direction assistée
With Tempomat	Con Tempomat	Avec régulateur de vitesse
before turbocharger	Con turbocompresor	avant turbocompresseur
Connection	Conexión	Connexion
Fuel consumption	Consumo de combustible	Consommation de carburant
from catalytic converter to front muffler	Del catalizador al presilenciador	Du catalyseur après silenciexu avant
Right	Derecha	Droite
Dimensions and values	Dimensiones y valores	Dimensions et valeurs
Two functions	Dos funciones	Deux fonctionnes
Electric	Eléctrico	Électrique
Angled Shape	En forma de ángulo	Forme angulaire
Euro 2000, CEE 2000	Euro 2000, CEE 2000	Euro 2000, CEE 2000
Euro 3 (D4)	Euro 3 (D4)	Euro 3 (D4)
Euro 4	Euro 4	Euro 4
Euro 4 (D4)	Euro 4 (D4)	Euro 4 (D4)
Euro 5	Euro 5	Euro 5
Euro 6	Euro 6	Euro 6
Euro 6+	Euro 6+	Euro 6+
Euro 6b	Euro 6b	Euro 6b
Euro 6c	Euro 6c	Euro 6c
Euro 6d-Temp	Euro 6d-Temp	Euro 6d-Temp
Euro 96, CEE 95	Euro 96, CEE 95	Euro 96, CEE 95
Except	Excepto	Sauf
Maker	Fabricante	Constructeur
Thread	Fijación	Fixation
Particulate Filter	Filtro de partículas	Filtre à particules
Front	Frontal	Frontale
Towbar	Gancho de remolque	Dispositif d'attelage
Petrol	Gasolina	Essence
Leaded fuel	Gasolina con plomo	Essence avec plomb
Unleaded fuel	Gasolina sin plomo	Essence sans plomb
Glossary	Glosario	Glossaire
Grey	Gris	Gris
Smoke grey	Gris humo	Gris fumée
Consultation guide	Guía de consulta	Guide à la consultation
Hydraulic	Hidráulico	Hydraulique
Gauges	Indicadores	Indicateurs
Index of makers	Índice de fabricantes	Indice des constructeurs
Index of references	Índice de referencias	Indice des références
Technical information	Información técnica	Information technique
Inside	Interior	Intérieur
Introduction	Introducción	Introduction
Left	Izquierda	Gauche
Length	Longitud	Longueur
Manual Transmission, 4-speed	Manual, 4 vel.	Boîte de vitesses manuelle à 4 vitesses
Manual Transmission, 5-speed	Manual, 5 vel.	Boîte de vitesses manuelle à 5 vitesses
Manual Transmission, 6-speed	Manual, 6 vel.	Boîte de vitesses manuelle à 6 vitesses
Brown	Marrón	Brune
Mechanical	Mecánico	Mécanique
Engine	Motor	Moteur
For engines with EGR	Motores con EGR	Moteurs avec recyclage des gaz d'échappement
For engines without EGR	Motores sin EGR	Moteurs sans EGR
Black	Negro	Noir
Not for Euro5/Euro6	No Euro5/Euro6	Pas pour Euro5/Euro6
Emission standard	Norma de emisiones	Norme d'émission
Number of wires	Número de cables	Nombre de fils
Optional	Opcional	Optionnel
Lever	Palanca	Levier
For ...	Para ...	Pour ...
For cylinder	Para cilindro	Pour le cylindre
For soot particulate filter	Para filtro de partículas	pour filtre à particules
For leaded fuel modifications	Para modificaciones de gasolina con plomo	Sauf modifications pour essence avec plomb
for vehicles with factory fitted soot -/particulate filter	Para vehí. con filtro hollín/partículas de fábrica	Pr véh. avec filtre à particules monté départ usine

With soot filter	Para vehículos con filtro de partículas	For vehicles with soot filter
With diesel soot filter	Para vehículos con filtro de partículas diesel	For vehicles with diesel soot filter
With urea injection	Para vehículos con inyección de urea	Pour véhicules à injection d'urée
Rear	Posterior/Trasero	Postérieur/Arrière
Point	Punto	Point
Suitable	Reemplaza	Remplace
Red	Rojo	Rouge
Cylindrical thread	Rosca cilíndrica	Filetage cylindrique
Body thread	Rosca del cuerpo	Dimension filetage
Outlet	Salida	Sortie
Sensor	Sensor	Senseur
Symbols	Símbolos	Symboles
Without	Sin	Sans
Without cable	Sin cables	Sans câbles
Without check control	Sin panel de control	Sans table de commande
Without Tempomat	Sin Tempomat	Sans régulateur de vitesse
Only	Sólo	Seulement
Only for Bosch equipment	Sólo para equipos Bosch	Seulement pour Bosch equipment
Only for Delphi equipment	Sólo para equipos Delphi	Seulement pour Delphi equipment
All models	Todos los modelos	Tous les modèles
Exhaust turbocharger	Turbocompresor escape	Turbocompresseur à gaz d'échappement
EGR valve at manifold	Valvula EGR en codo	Vanne EGR au collecteur
Various	Varios	Divers
Various models	Varios modelos	Divers modèles
Various engines	Varios motores	Divers moteurs
Speed	Velocidades/Marchas	Vitesses
See	Ver	Voir
See also	Ver también	Voir aussi
Green	Verde	Vert
Version	Versión	Version
Violet	Violeta	Violette

(A)	AUSTRIA	AUSTRIA	AUTRICHE
(ARG)	ARGENTINE	ARGENTINA	ARGENTINE
(AUS)	AUSTRALIA	AUSTRALIA	AUSTRALIE
(BR)	BRAZIL	BRASIL	BRÉSIL
(CH)	SWITZERLAND	SUIZA	SUISSE
(CHINA)	CHINA	CHINA	CHINE
(CND)	CANADA	CANADÁ	CANADA
(CS)	CZECH REPUBLIC	REPÚBLICA CHECA	RÉPUBLIQUE TCHÈQUE
(D)	GERMANY	ALEMANIA	ALLEMAGNE
(E)	SPAIN	ESPAÑA	ESPAGNE
(EU)	EUROPE	EUROPA	EUROPE
(F)	FRANCE	FRANCIA	FRANCE
(GB)	GREAT BRITAIN	GRAN BRETAÑA	GRANDE BRETAGNE
(GR)	GREECE	GRECIA	GRÈCE
(I)	ITALY	ITALIA	ITALIE
(IND)	INDIA	INDIA	INDE
(J)	JAPAN	JAPÓN	JAPON
(PL)	POLAND	POLONIA	POLOGNE
(RUS)	RUSSIA	RUSIA	RUSSIE
(S)	SWEDEN	SUECIA	SUÈDE
(TR)	TURKEY	TURQUÍA	TURQUIE
(USA)	EEUU	USA	USA
(ZA)	SOUTH AFRICA	SUDÁFRICA	AFRIQUE DU SUD
---	Not available	No disponible	Non disponible
... ->	From to ...->	Desde …->	Depuis ... ->
-> ...	-> ... Up to	->... Hasta	->... Jusqu'à
-> Ch.	Up to Chassis	Hasta Chasis	Jusqu'à Châssis
-> Model	-> ... Up to Model	Hasta Modelo	-> ...Année Jusqu'à
-> Nº	Up to number	Hasta el número	Jusqu'à numéro
-> Nº Vet	Up to number Vet (VIN)	Hasta número Vet (VIN)	Jusqu'à numéro Vet (VIN)
-> NºOrg.	Up to Org	Hasta Org	Jusqu'à Org
-> NºRIC	Up to Ricambi	Hasta Ricambi	Jusqu'à Ricambi
… units	... Units on each vehicle	... Piezas en cada vehículo	... Pièces par véhicule
16V	16 Valves/Volts	16 Válvulas/Voltios	16 Soupapes/Volts
24V	24 Valves/Volts	24 Válvulas/Voltios	24 Soupapes/Volts
2WD	2 Wheels drive	2 Ruedas motrices	2 Roues motrices
4WD	4 Wheels drive	4 Ruedas motrices	4 Roues motrices
A.	Ampere	Amperio	Ampère
A.C.	Air conditioning	Aire acondicionado	Air conditionné
Bar	Pressure	Presión	Pression
c.c.	Cubic centimeters	Centímetros cúbicos	Centimètres cube
Cable	Wire	Cable	Fil
Cabrio	Convertible	Descapotable	Décapotable
Ch.	Chassis	Chasis	Châssis
Ch.->	From chassis ...->	Desde chasis ...->	Depuis châssis ...->
Check Control	Check control	Panel de control	Tableau de contrôle
Climat	Climatization	Climatización	Climatisation
Colour	Colour	Color	Couleur
Com.	Commercial	Comercial	Commercial
Con.	Conical thread	Rosca cónica	Filetage conique
Cont.	Continued	Continuación/Sigue	Continuation/Suite
Coupe	Coupe	Cupé	Coupé
Cross references	Cross references	Cruce de referencias	Tableau des équivalences
Cyl.	Cylinders	Cilindros	Cylindres
Doors	Doors	Puertas	Portes
Ej.	Examples	Ejemplos	Exemples
Fitting position	Fitted on/to	Montado en/sobre	Monté dans/sur
HP	Horse power	Caballos de potencia	Puissance
I	Information	Información	Information
kW	Kilowatts	Kilovatios	Kilowatts
L.H.D.	Left hand drive	Conducción a la izquierda	Conduire à gauche
L.H.D./ R.H.D.	Left-hand/right-hand drive vehicles	Para dirección izquierda/derecha	Pour direction à droite/à gauche
L3, L4, L5, L6	Exhaust emission norm L…	Norma de emisiones L…	Norme les gaz d'échappement L…
LPG	Liquefied Petroleum Gas	Gas líquido	Gaz liquéfié
mm.	Millimeters	Milímetros	Millimètre
Model	Year Model	Año modelo	Année de construction
Model ->	From to Model ...->	Desde Modelo	Depuis Année ...->
Multi-point	Multi-point injection	Inyección multipunto	Injection multipoint
Nº	Number	Número	Nombre
Nº ->	From number ...->	Desde el número ...->	Depuis numéro ...->
Nº Org.->	From Org ...->	Desde Org ...->	Depuis Org ...->
Nº PR	Nº PR	Nº PR	Pour numéro PR
Nº RIC	Ricambi	Ricambi	Ricambi
Nº RIC->	From Ricambi ...->	Desde Ricambi	Depuis Ricambi ...->

Nº Vet ->	From Vet number (VIN) ...->	Desde número Vet (VIN) ...->	Depuis numéro Vet (VIN) ...->
NºOrg.	NºOrg.	NºOrg.	NºOrg.
No Nº PR	No Nº PR	No Nº PR	Non pour numéro PR
OE Nº	For original number	Para número original	Pour nombre original
Power brake	Power brake	Servo freno	Servo freins
Prod. Date ->	Production date from	fecha de producción desde	Date de production à partir de
R.H.D.	Right hand drive	Conducción a la derecha	Conduction à droite
RPM	Revolutions per minute	Revoluciones por minuto	Révolutions par minute
SA	SA Code	Código SA	pour SA code
Term.	Connectors	Conectores	Connecteurs
Trans.type	Transmission Type	Tipo caja de cambio	Type boîte de vitesses
Type	Engine Model	Modelo de motor	Nº moteur
V6	V6 cylinders	6 cilindros en V	6 cylindres en V

GLOSSARY BODY DESIGN / GLOSARIO TIPOS DE CARROCERIA / GLOSSARIE TYPES DE CARROSSERIE

Hatchback/Fastback.
Compacto 3/5p.
Hatchback/Fastback.

Truck/Lorry.
Camión.
Camion.

Saloon/Sedan.
Sedán.
A trois volumes.

Flatbed/Chassis.
Caja/Chasis.
Camion plate-forme/Châssis.

Station Wagon/SW.
Familiar/Combi/Kombi.
Break.

Minibus/Bus/Coach.
Microbus/Autobús.
Autobus/Autocar.

Minivan/MPV.
Monovolumen.
Monospace.

Box/Van.
Furgoneta/Furgón.
Camionnette.

Closed Off-Road/4WD/SUV.
Todo terreno cerrada/4x4/SUV.
Tout terrain à crosserie fermeé.

Open Off-Road/Pick-up truck.
Todo terreno abierta/Pick-up.
Tout terrain à crosserie ouverte.

Convertible/Roadster.
Descapotable/Cabrio.
Décapotable.

Tractor.
Tractor.
Tracteur.

Coupe/Sportback.
Cupé.
Coupé.

Motorcycle.
Motocicleta.
Moto.

FAE

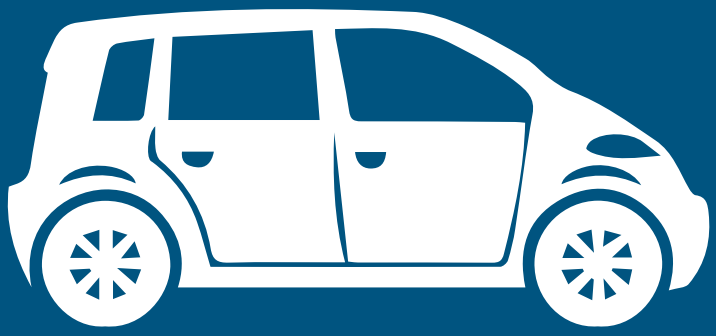

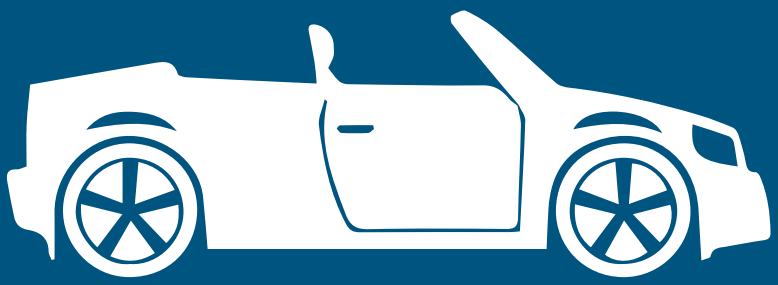

VEHICLE APPLICATIONS
APLICACIONES POR VEHÍCULO
APPLICATIONS POUR VÉHICULE

INDEX OF MAKERS / ÍNDICE DE FABRICANTES / INDEX DES CONSTRUCTEURS

	PAG.		PAG.		PAG.
ALFA ROMEO	29	MAN	37	SEAT	56-58
AUDI	29-35	MERCEDES-BENZ	37-53	SKODA	58-61
CHEVROLET	35	OPEL	53-55	VAUXHALL	61
CITROËN	35	PEUGEOT	55	VOLVO	61-62
FIAT	35-36	PORSCHE	55	VOLKSWAGEN	62-96
LANCIA	37	SAAB	55-56		

	PAG.		PAG.		PAG.
ASTRA	72	IRISBUS	75-76		
DAF	72-75	IVECO	76-95		

EXAMPLES / EJEMPLOS / EXEMPLES

ALFA ROMEO

MAKER / FABRICANTE / CONSTRUCTEUR			
MODEL / MODELO / MODELE			**Date / Fecha / Date**
ENGINE / MOTOR / MOTEUR			KW HP
	Info	*Univ. / KIT*	***REF. FAE***
147 (937) 1.9 JTD (937.AXD1A, 937.BXD1A)			**2001-10**
937 A2.000		85	115
After soot particulate filter, 1560 mm., Black			**68038**
147 (937) 1.9 JTD 16V (937.AXM1B, 937.AXS1B)			**2004-10**
192 B1.000		100	136
After soot particulate filter, 1560 mm., Black			**68038**
147 (937) 1.9 JTDM (937.AXD1A, 937.AXV1A, 937.BXB1A)			**2004-10**
939 A7.000		85	115
After soot particulate filter, 1560 mm., Black			**68038**
147 (937) 1.9 JTDM 16V (937.AXN1B, 937.AXZ1B)			**2008-10**
937 A6.000		125	170
After soot particulate filter, 1560 mm., Black			**68038**
Giulietta (940) 1.4 TB (940FXA1A, 940FXT1A)			**2010-20**
198 A4.000, 940 B7.000		88	120
Engine 940 B7.000, After catalytic converter			**68075**
GT (937) 1.9 JTD (937CXN1B)			**2003-10**
937 A5.000		110	150
After soot particulate filter, 1560 mm., Black			**68038**
Mito (955) 1.3 MultiJet (955AXH1B, 955AXT1A)			**2008-10**
199 A3.000, 955 B2.000		66	90
Before soot particulate filter, Before catalytic converter			**68061**
Mito (955) 1.3 MultiJet (955AXP1A, 955AYC1A)			**2009-18**
199 B1.000, 330 A1.000		70	95
Euro 5			**68080**
Mito (955) 1.3 MultiJet (955AXT1A)			**2011-15**
199 B4.000		62	84
After soot particulate filter, 485,2 mm., Black			**68080**
Mito (955) 1.3 MultiJet (955AXT1A, 955AYA1A)			**2013-15**
199 B8.000		59	80
After soot particulate filter, 485,2 mm., Black			**68080**
Mito (955) 1.6 JTDM (955AXC1B)			**2008-15**
198 A2.000, 955 A3.000		88	120
Engine 955 A3.000, Before catalytic converter			**68075**

AUDI

A1 (8X1, 8XK) 1.6 TDI			**2010-15**
CAYC		77	105
Before soot particulate filter, 526 mm., Brown			**68021**

INFORMATION / INFORMACIÓN / INFORMATION

G.B.

This catalog considers vehicles with:

- Left Hand Drive (L.H.D.).
- Manual Gear, 5 speed.
- Without Air Conditioning.
- Without Check Control.
- Without Cruise Control.
- Without ABS.

As the Standard vehicle (generic).

Vehicles with different features (criteria) are treated in a specific way in the information column.

E

En este catálogo se han considerado vehículos con:

- Conducción a la izquierda (L.H.D.).
- Cambio Manual, 5 velocidades.
- Sin Aire Acondicionado.
- Sin Check Control.
- Sin Cruise Control.
- Sin ABS.

Como el vehículo Standard (genérico).

El resto de vehículos con otras características (criterios) se tratan de forma específica en la columna de información.

F

Dans ce catalogue sont considérés les véhicules avec:

- Conduction à gauche (L.H.D.).
- Avec boîte de vitesses manuelle, 5 vitesses.
- Sans Air Conditionné/Climatisation.
- Sans Tableau de Contrôle.
- Sans Vitesse de Croisière.
- Sans Antiblocage (ABS).

Comme le véhicule Standard (générique).

Le reste des véhicules avec d'autres caractéristiques (critères) sont abordés d'une façon spécifique dans la colonne d'information.

ALFA ROMEO

147 (937) 1.9 JTD (937.AXD1A, 937.BXD1A)			**2001-10**
937 A2.000	85	115	
After soot particulate filter, 1560 mm., Black			**68038**
147 (937) 1.9 JTD 16V (937.AXM1B, 937.AXS1B)			**2004-10**
192 B1.000	100	136	
After soot particulate filter, 1560 mm., Black			**68038**
147 (937) 1.9 JTDM (937.AXD1A, 937.AXV1A, 937.BXB1A)			**2004-10**
939 A7.000	85	115	
After soot particulate filter, 1560 mm., Black			**68038**
147 (937) 1.9 JTDM 16V (937.AXN1B, 937.AXZ1B)			**2008-10**
937 A6.000	125	170	
After soot particulate filter, 1560 mm., Black			**68038**
Giulietta (940) 1.4 TB (940FXA1A, 940FXT1A)			**2010-20**
198 A4.000, 940 B7.000	88	120	
Engine 940 B7.000, After catalytic converter			**68075**
GT (937) 1.9 JTD (937CXN1B)			**2003-10**
937 A5.000	110	150	
After soot particulate filter, 1560 mm., Black			**68038**
Mito (955) 1.3 MultiJet (955AXH1B, 955AXT1A)			**2008-10**
199 A3.000, 955 B2.000	66	90	
Before soot particulate filter, Before catalytic converter			**68061**
Mito (955) 1.3 MultiJet (955AXP1A, 955AYC1A)			**2009-18**
199 B1.000, 330 A1.000	70	95	
Euro 5			**68080**
Mito (955) 1.3 MultiJet (955AXT1A)			**2011-15**
199 B4.000	62	84	
After soot particulate filter, 485,2 mm., Black			**68080**
Mito (955) 1.3 MultiJet (955AXT1A, 955AYA1A)			**2013-15**
199 B8.000	59	80	
After soot particulate filter, 485,2 mm., Black			**68080**
Mito (955) 1.6 JTDM (955AXC1B)			**2008-15**
198 A2.000, 955 A3.000	88	120	
Engine 955 A3.000, Before catalytic converter			**68075**

AUDI

A1 (8X1, 8XK) 1.6 TDI			**2010-15**
CAYC	77	105	
Before soot particulate filter, 526 mm., Brown			**68021**
After soot particulate filter; 501 mm.; R.H.D.			**68024**
After soot particulate filter; 746 mm.			**68035**
Before soot particulate filter; 426 mm., Brown			**68036**
A1 (8X1, 8XK) 1.6 TDI			**2011-15**
CAYB	66	90	
Before soot particulate filter, 526 mm., Brown			**68021**
After soot particulate filter; 501 mm.; R.H.D.			**68024**
After soot particulate filter; 746 mm.			**68035**
Before soot particulate filter; 426 mm., Brown			**68036**
A1 Sportback (8XA, 8XF) 1.6 TDI			**2011-15**
CAYB	66	90	
Before soot particulate filter, 526 mm., Brown			**68021**
After soot particulate filter; 501 mm.; R.H.D.			**68024**
After soot particulate filter; 746 mm.			**68035**
Before soot particulate filter; 426 mm., Brown			**68036**
A1 Sportback (8XA, 8XF) 1.6 TDI			**2011-15**
CAYC	77	105	
Before soot particulate filter, 526 mm., Brown			**68021**
After soot particulate filter; 501 mm.; R.H.D.			**68024**
After soot particulate filter; 746 mm.			**68035**
Before soot particulate filter; 426 mm., Brown			**68036**
A3 (8P1) 1.6 TDI			**2009-12**
CAYB	66	90	
Before soot particulate filter, 646 mm., Brown			**68002**
After soot particulate filter; 766 mm.			**68003**
A3 (8P1) 1.6 TDI			**2009-12**
CAYC	77	105	
Before soot particulate filter, 646 mm., Brown			**68002**
After soot particulate filter; 766 mm.			**68003**
A3 (8P1) 1.9 TDI			**2003-10**
BKC, BLS, BXE	77	105	
Engine BLS, 10.2005 ->, Before turbocharger			**68001**
Engine BLS, 10.2005 ->; After soot particulate filter			**68005**
Engine BLS, 10.2005 ->, Before soot particulate filter			**68011**
A3 (8P1) 2.0 TDI			**2003-12**
AZV, CBAA, CFFA	100	136	
Engine CBAA, Before soot particulate filter			**68002**
Engine CBAA, After soot particulate filter			**68003**
A3 (8P1) 2.0 TDI			**2006-12**
BMN, CBBB, CFGB	125	170	
Engine BMN, Engine CBBB, 09.2008 - 05.2010, Before turbocharger			**68001**
Engine CBBB, Before soot particulate filter			**68002**
Engine CBBB, After soot particulate filter			**68003**
Engine BMN, 06.2008 ->; After soot particulate filter			**68005**
Engine BMN, Before soot particulate filter			**68011**

AUDI Cont.

A3 (8P1) 2.0 TDI			**2005-08**
BMM	103	140	
Before turbocharger, 656 mm., Black			**68001**
After soot particulate filter; 766 mm.			**68005**
Engine BMM, Before soot particulate filter			**68011**
A3 (8P1) 2.0 TDI			**2006-08**
BUY	120	163	
Before turbocharger, 656 mm., Black			**68001**
After soot particulate filter; 766 mm.			**68005**
Before soot particulate filter, 446 mm., Brown			**68011**
A3 (8P1) 2.0 TDI 16V			**2003-12**
BKD, CBAB, CBEA, CFFB, CLJA	103	140	
Engine CBAB, Before soot particulate filter			**68002**
Engine CBAB, After soot particulate filter			**68003**
A3 (8P1) 2.0 TDI 16V quattro			**2004-12**
BKD, CBAB, CFFB	103	140	
09.2008-05.2010, Ch.8P9006241-Ch.8PA250000, Before soot particulate filter			**68002**
Engine CBAB, After soot particulate filter			**68003**
After soot particulate filter; 766 mm.			**68005**
A3 (8P1) 2.0 TDI quattro			**2006-12**
BMN, CBBB, CFGB	125	170	
Engine CBBB, Engine BMN, -> 05.2010, Before turbocharger			**68001**
Engine CBBB, 07.2008 - 05.2010, Before soot particulate filter			**68002**
Engine CBBB, After soot particulate filter			**68003**
Engine BMN, 06.2008 ->; After soot particulate filter			**68005**
Engine BMN, Before soot particulate filter			**68011**
A3 (8P1) 2.0 TDI quattro			**2006-08**
BMM	103	140	
Before turbocharger, 656 mm., Black			**68001**
After soot particulate filter; 766 mm.			**68005**
Engine BMM, Before soot particulate filter			**68011**
A3 (8V1, 8VK) 1.6 TDI			**2013-17**
CRKB, CXXB, DBKA	81	110	
Engine CXXB, Engine DBKA, Before soot particulate filter			**68013**
Engine CRKB, After soot particulate filter			**68014**
Engine CRKB, Before soot particulate filter			**68017**
Engine CXXB, Engine DBKA, 05.2015 - 03.2017, Before catalytic converter			**68019**
Engine CRKB, Before catalytic converter			**68048**
A3 (8V1, 8VK) 1.6 TDI			**2012-15**
CLHA	77	105	
After soot particulate filter, 666 mm.			**68014**
Before soot particulate filter, 881 mm., Brown			**68017**
A3 (8V1, 8VK) 2.0 TDI			**2012-17**
CRBC, CRLB, CRUA, DBGA, DCYA, DEJA	110	150	
In front of exhaust turbocharger, 566 mm., Black			**68007**
A3 (8V1, 8VK) 2.0 TDI			**2013-16**
CUNA	135	184	
In front of exhaust turbocharger, 566 mm., Black			**68007**
A3 (8V1, 8VK) 2.0 TDI			**2013-16**
CRBD, CRLC	100	136	
In front of exhaust turbocharger, 566 mm., Black			**68007**
A3 (8V1, 8VK) 2.0 TDI quattro			**2012-17**
CRBC, CRLB, DCYA	110	150	
In front of exhaust turbocharger, 566 mm., Black			**68007**
A3 (8V1, 8VK) 2.0 TDI quattro			**2012-17**
CUNA, DGCA	135	184	
In front of exhaust turbocharger, 566 mm., Black			**68007**
A3 Cabriolet (8P7) 1.6 TDI			**2009-13**
CAYC	77	105	
Before soot particulate filter, 646 mm., Brown			**68002**
After soot particulate filter; 766 mm.			**68003**
A3 Cabriolet (8P7) 1.9 TDI			**2008-09**
BLS	77	105	
Before turbocharger, 656 mm., Black			**68001**
After soot particulate filter; 766 mm.			**68005**
Before soot particulate filter, 446 mm., Brown			**68011**
A3 Cabriolet (8P7) 2.0 TDI			**2008-13**
CBAB, CFFB	103	140	
Engine CBAB, Before soot particulate filter			**68002**
Engine CBAB, After soot particulate filter			**68003**
A3 Cabriolet (8P7) 2.0 TDI			**2008-13**
CBAA, CFFA	100	136	
Engine CBAA, Before soot particulate filter			**68002**
Engine CBAA, After soot particulate filter			**68003**
A3 Cabriolet (8V7, 8VE) 1.6 TDI			**2014-20**
CRKB, CXXB	81	110	
Engine CXXB, Before soot particulate filter			**68013**
Engine CRKB, After soot particulate filter			**68014**
Before soot particulate filter, 881 mm., Brown			**68017**
Engine CXXB, 05.2015 ->, Before catalytic converter			**68019**
Engine CRKB, Before catalytic converter			**68048**
A3 Cabriolet (8V7, 8VE) 2.0 TDI			**2013-20**
CRLB, DCYA	110	150	
In front of exhaust turbocharger, 566 mm., Black			**68007**

AUDI Cont.

A3 Cabriolet (8V7, 8VE) 2.0 TDI		**2014 ->**
CUNA, DGCA	135	184
In front of exhaust turbocharger, 566 mm., Black		**68007**
A3 Cabriolet (8V7, 8VE) 2.0 TDI		**2013 ->**
CRLC	100	136
In front of exhaust turbocharger, 566 mm., Black		**68007**
A3 Cabriolet (8V7, 8VE) 2.0 TDI quattro		**2014-20**
CRLB, DCYA	110	150
In front of exhaust turbocharger, 566 mm., Black		**68007**
A3 Cabriolet (8V7, 8VE) 2.0 TDI quattro		**2014-20**
CUNA, DGCA	135	184
In front of exhaust turbocharger, 566 mm., Black		**68007**
A3 Limousine (8VS, 8VM) 1.6 TDI		**2014-20**
CRKB, CXXB, DBKA	81	110
Engine DBKA, Engine CXXB, Before soot particulate filter		**68013**
After soot particulate filter, 666 mm.		**68014**
Before soot particulate filter, 881 mm., Brown		**68017**
Engine DBKA, Engine CXXB, 05.2015 - 03.2017, Before catalytic converter		**68019**
Engine CRKB, Before catalytic converter		**68048**
A3 Limousine (8VS, 8VM) 1.6 TDI		**2013 ->**
CLHA	77	105
After soot particulate filter, 666 mm.		**68014**
Before soot particulate filter, 881 mm., Brown		**68017**
A3 Limousine (8VS, 8VM) 1.6 TDI quattro		**2015 ->**
CXXB	81	110
Before soot particulate filter, 896 mm., Brown		**68013**
-> 03.2017, Before catalytic converter		**68019**
A3 Limousine (8VS, 8VM) 2.0 TDI		**2014-20**
CUNA	135	184
In front of exhaust turbocharger, 566 mm., Black		**68007**
A3 Limousine (8VS, 8VM) 2.0 TDI		**2013-20**
CRBC, CRLB, CRUA, DBGA, DCYA, DEJA, DFGA	110	150
Engine CRLB, DEJA, CRUA, DBGA, CRBC, In front of exhaust turbocharger		**68007**
A3 Limousine (8VS, 8VM) 2.0 TDI		**2013 ->**
CRBD, CRLC	100	136
In front of exhaust turbocharger, 566 mm., Black		**68007**
A3 Limousine (8VS, 8VM) 2.0 TDI quattro		**2013-20**
CRBC, CRLB, DCYA	110	150
In front of exhaust turbocharger, 566 mm., Black		**68007**
A3 Limousine (8VS, 8VM) 2.0 TDI quattro		**2014-18**
CUNA, DGCA	135	184
In front of exhaust turbocharger, 566 mm., Black		**68007**
A3 Limousine (8VS, 8VM) 30 TDI		**2018-20**
DGTE	85	115
With factory fitted soot -/particulate filter, 696 mm.		**68059**
Engine DGTE, Ch. 8V-L-000001 ->, Before soot particulate filter		**68078**
A3 Sportback (8PA) 1.6 TDI		**2009-13**
CAYB	66	90
Before soot particulate filter, 646 mm., Brown		**68002**
After soot particulate filter; 766 mm.		**68003**
A3 Sportback (8PA) 1.6 TDI		**2009-13**
CAYC	77	105
Before soot particulate filter, 646 mm., Brown		**68002**
After soot particulate filter; 766 mm.		**68003**
A3 Sportback (8PA) 1.9 TDI		**2004-10**
BKC, BLS, BXE	77	105
Engine BLS, 10.2005 ->, Before turbocharger		**68001**
Engine BLS, 10.2005 ->; After soot particulate filter		**68005**
Engine BLS, 10.2005 ->, Before soot particulate filter		**68011**
A3 Sportback (8PA) 2.0 TDI		**2004-13**
AZV, CBAA, CFFA	100	136
Engine CBAA, Before soot particulate filter		**68002**
Engine CBAA, After soot particulate filter		**68003**
A3 Sportback (8PA) 2.0 TDI		**2006-13**
BMN, CBBB, CFGB	125	170
Engine BMN, Engine CBBB, 05.2010 ->, Before turbocharger		**68001**
Engine CBBB, Before soot particulate filter		**68002**
Engine CBBB, After soot particulate filter		**68003**
Engine BMN; After soot particulate filter		**68005**
Engine BMN, Before soot particulate filter		**68011**
A3 Sportback (8PA) 2.0 TDI		**2005-08**
BMM	103	140
Before turbocharger, 656 mm., Black		**68001**
After soot particulate filter; 766 mm.		**68005**
Engine BMM, Before soot particulate filter		**68011**
A3 Sportback (8PA) 2.0 TDI		**2006-08**
BUY	120	163
Before turbocharger, 656 mm., Black		**68001**
After soot particulate filter; 766 mm.		**68005**
Before soot particulate filter, 446 mm., Brown		**68011**
A3 Sportback (8PA) 2.0 TDI 16V		**2004-13**
BKD, CBAB, CBEA, CFFB, CLJA	103	140
Engine CBAB, Before soot particulate filter		**68002**
Engine CBAB, After soot particulate filter		**68003**

FAE

AUDI Cont.

A3 Sportback (8PA) 2.0 TDI 16V quattro		**2005-13**
BKD, CBAB, CFFB	103	140
Engine CBAB, Before soot particulate filter		**68002**
Engine CBAB, After soot particulate filter		**68003**
A3 Sportback (8PA) 2.0 TDI quattro		**2006-13**
BMN, CBBB, CFGB	125	170
Engine BMN, Engine CBBB, -> 02.2010, Before turbocharger		**68001**
Engine CBBB, 07.2008 - 05.2010, Before soot particulate filter		**68002**
Engine CBBB, After soot particulate filter		**68003**
Engine BMN, 06.2008 ->; After soot particulate filter		**68005**
Engine BMN, Before soot particulate filter		**68011**
A3 Sportback (8PA) 2.0 TDI quattro		**2006-08**
BMM	103	140
Before turbocharger, 656 mm., Black		**68001**
After soot particulate filter; 766 mm.		**68005**
Engine BMM, Before soot particulate filter		**68011**
A3 Sportback (8VA, 8VF) 1.6 TDI		**2013-20**
CRKB, CXXB, DBKA	81	110
Engine DBKA, Engine CXXB, Before soot particulate filter		**68013**
Engine CRKB, After soot particulate filter		**68014**
Engine CRKB, Before soot particulate filter		**68017**
Engine DBKA, Engine CXXB, 05.2015 - 03.2017, Before catalytic converter		**68019**
Engine CRKB, Before catalytic converter		**68048**
A3 Sportback (8VA, 8VF) 1.6 TDI		**2012 ->**
CLHA	77	105
01.2013 ->, After soot particulate filter		**68014**
01.2013 ->, Before soot particulate filter		**68017**
A3 Sportback (8VA, 8VF) 1.6 TDI quattro		**2015-16**
CXXB	81	110
Before soot particulate filter, 896 mm., Brown		**68013**
Before catalytic converter		**68019**
A3 Sportback (8VA, 8VF) 2.0 TDI		**2012-20**
CRBC, CRLB, CRUA, DBGA, DCYA, DEJA, DFGA	110	150
Engine CRLB, DEJA, CRUA, DBGA, CRBC, In front of exhaust turbocharger		**68007**
A3 Sportback (8VA, 8VF) 2.0 TDI		**2013-16**
CUNA	135	184
In front of exhaust turbocharger, 566 mm., Black		**68007**
A3 Sportback (8VA, 8VF) 2.0 TDI		**2013-16**
CRBD, CRLC	100	136
In front of exhaust turbocharger, 566 mm., Black		**68007**
A3 Sportback (8VA, 8VF) 2.0 TDI quattro		**2013-18**
CUNA, DGCA	135	184
Engine CUNA, In front of exhaust turbocharger		**68007**
A3 Sportback (8VA, 8VF) 2.0 TDI quattro		**2013-20**
CRBC, CRLB, DCYA	110	150
In front of exhaust turbocharger, 566 mm., Black		**68007**
A3 Sportback (8VA, 8VF) 30 TDI		**2018-20**
DGTE	85	115
With factory fitted soot -/particulate filter, 696 mm.		**68059**
Engine DGTE, Ch. 8V-L-000001 ->, Before soot particulate filter		**68078**
A4 Allroad B8 (8KH) 2.0 TDI quattro		**2013-16**
CNHA	140	190
In front of exhaust turbocharger, PR 7MM		**68093**
A4 Allroad B8 (8KH) 2.0 TDI quattro		**2009-16**
CAHA	125	170
After soot particulate filter, 236 mm., Brown		**68033**
A4 Allroad B8 (8KH) 2.0 TDI quattro		**2009-16**
CAGA, CJCA	105	143
After soot particulate filter, 236 mm., Brown		**68033**
A4 Allroad B8 (8KH) 2.0 TDI quattro		**2009-16**
CAGB, CJCB, CSUB	100	136
After soot particulate filter, 236 mm., Brown		**68033**
A4 Allroad B8 (8KH) 2.0 TDI quattro		**2009-16**
CAHB, CGLD, CNHC	120	163
After soot particulate filter, 236 mm., Brown		**68033**
A4 Allroad B8 (8KH) 3.0 TDI quattro		**2012-16**
CDUC, CKVB, CKVC	180	245
Engine CDUC, 08.2013 ->		**68084**
A4 Allroad B8 (8KH) 3.0 TDI quattro		**2009-12**
CCWA	176	240
Engine CCWA, Before soot particulate filter		**68083**
Before catalytic converter, Before turbocharger 336 mm., Black		**68097**
A4 B5 (8D2) 1.8 T quattro		**1995-00**
AEB, ANB, APU, ARK, ATW, AWT	110	150
Engine ANB, AWT, Ch.8DX200001-Ch.8DY100000, Before soot particulate filter		**68002**
A4 B7 (8EC) 1.9 TDI		**2004-08**
BKE, BRB	85	116
Ch. 8E-6-159 001 - Ch. 8E-8-000 001, After soot particulate filter		**68079**
Engine BRB, Before soot particulate filter		**68089**
A4 B7 (8EC) 2.0 TDI		**2006-08**
BRD	125	170
Ch. 8E-6-159 001 - Ch. 8E-8-000 001, After soot particulate filter		**68079**
Engine BRD, Before soot particulate filter		**68089**

AUDI Cont.

A4 B7 (8EC) 2.0 TDI			**2004-08**
BPW	103	140	
After soot particulate filter, 786 mm.			**68079**
Before soot particulate filter			**68089**
A4 B7 (8EC) 2.0 TDI			**2006-08**
BVA	120	163	
Before soot particulate filter			**68089**
A4 B7 (8EC) 2.0 TDI 16V			**2004-08**
BLB, BRE	103	140	
Engine BRE, Ch.8E6159001-Ch.8E8000001, After soot particulate filter			**68079**
Engine BRE, Before soot particulate filter			**68089**
A4 B7 (8EC) 2.0 TDI quattro			**2006-08**
BPW	103	140	
Ch. 8E-6-159 001 - Ch. 8E-8-000 001, After soot particulate filter			**68079**
Engine BPW, Before soot particulate filter			**68089**
A4 B7 (8EC) 2.0 TDI quattro			**2006-08**
BRD	125	170	
Before soot particulate filter			**68089**
A4 B7 (8EC) 2.0 TDI quattro			**2006-08**
BVA	120	163	
Before soot particulate filter			**68089**
A4 B7 (8EC) 2.7 TDI			**2006-08**
BPP	132	180	
Before catalytic converter, Before turbocharger 336 mm., Black			**68097**
A4 B7 (8EC) 2.7 TDI			**2005-08**
BSG	120	163	
Before catalytic converter, Before turbocharger 336 mm., Black			**68097**
A4 B7 (8EC) 3.0 TDI quattro			**2004-08**
BKN	150	204	
Before catalytic converter, Before turbocharger 336 mm., Black			**68097**
A4 B7 (8EC) 3.0 TDI quattro			**2006-08**
ASB	171	233	
Before catalytic converter, Before turbocharger 336 mm., Black			**68097**
A4 B7 Avant (8ED) 1.9 TDI			**2004-08**
BKE, BRB	85	116	
Engine BRB, Ch.8E-6-159 001-Ch.8E-8-000 001, After soot particulate filter			**68079**
Engine BRB, Before soot particulate filter			**68089**
A4 B7 Avant (8ED) 2.0 TDI			**2006-08**
BRD	125	170	
Ch. 8E-6-159 001 - Ch. 8E-8-000 001, After soot particulate filter			**68079**
Engine BRD, Before soot particulate filter			**68089**
A4 B7 Avant (8ED) 2.0 TDI			**2004-08**
BPW	103	140	
After soot particulate filter, 786 mm.			**68079**
Before soot particulate filter			**68089**
A4 B7 Avant (8ED) 2.0 TDI			**2006-08**
BVA	120	163	
Ch. 8E-6-159 001 - Ch. 8E-8-000 001, After soot particulate filter			**68079**
Engine BVA, Before soot particulate filter			**68089**
A4 B7 Avant (8ED) 2.0 TDI 16V			**2004-08**
BLB, BRE	103	140	
Engine BRE, Ch.8E-6-159 001-Ch.8E-8-000 001, After soot particulate filter			**68079**
Engine BRE, Before soot particulate filter			**68089**
A4 B7 Avant (8ED) 2.0 TDI quattro			**2006-08**
BPW	103	140	
Ch. 8E-6-159 001 - Ch. 8E-8-000 001, After soot particulate filter			**68079**
Engine BPW, Before soot particulate filter			**68089**
A4 B7 Avant (8ED) 2.0 TDI quattro			**2006-08**
BRD	125	170	
After soot particulate filter, 786 mm.			**68079**
Before soot particulate filter			**68089**
A4 B7 Avant (8ED) 2.0 TDI quattro			**2006-08**
BVA	120	163	
After soot particulate filter, 786 mm.			**68079**
Before soot particulate filter			**68089**
A4 B7 Avant (8ED) 2.7 TDI			**2006-08**
BPP	132	180	
Before catalytic converter, Before turbocharger 336 mm., Black			**68097**
A4 B7 Avant (8ED) 2.7 TDi			**2005-08**
BSG	120	163	
Before catalytic converter, Before turbocharger 336 mm., Black			**68097**
A4 B7 Avant (8ED) 3.0 TDI quattro			**2004-08**
BKN	150	204	
Before catalytic converter, Before turbocharger 336 mm., Black			**68097**
A4 B7 Avant (8ED) 3.0 TDI quattro			**2006-08**
ASB	171	233	
Before catalytic converter, Before turbocharger 336 mm., Black			**68097**
A4 B7 Cabriolet (8HE) 2.0 TDI			**2006-09**
BPW	103	140	
After soot particulate filter, 786 mm.			**68079**
Engine BPW, Before soot particulate filter			**68089**

FAE

AUDI Cont.

A4 B7 Cabriolet (8HE) 2.0 TDI			**2006-09**
BRC	100	136	
After soot particulate filter, 786 mm.			**68079**
Engine BRC, Before soot particulate filter			**68089**
A4 B7 Cabriolet (8HE) 2.7 TDI			**2006-09**
BPP	132	180	
Before catalytic converter, Before turbocharger 336 mm., Black			**68097**
A4 B7 Cabriolet (8HE) 3.0 TDI quattro			**2006-09**
ASB	171	233	
Before catalytic converter, Before turbocharger 336 mm., Black			**68097**
A4 B7 Cabriolet (8HE) 3.0 TDI quattro			**2006-09**
BKN	150	204	
Before catalytic converter, Before turbocharger 336 mm., Black			**68097**
A4 B8 (8K2) 2.0 TDI			**2007-15**
CAGA, CJCA, CMEA, CMFA	105	143	
After soot particulate filter, 236 mm., Brown			**68033**
CAGA, ->01.2008, ->Ch.8K8A015000, ->Ch.8K8N005000, W/soot filter			**68083**
A4 B8 (8K2) 2.0 TDI			**2007-15**
CAGB, CJCB, CSUB	100	136	
After soot particulate filter, 236 mm., Brown			**68033**
CAGA, ->01.2008, ->Ch.8K8A015000, ->Ch.8K8N005000, W/soot filter			**68083**
A4 B8 (8K2) 2.0 TDI			**2008-12**
CAHA	125	170	
After soot particulate filter, 236 mm., Brown			**68033**
A4 B8 (8K2) 2.0 TDI			**2008-15**
CAGC, CJCC	88	120	
After soot particulate filter, 236 mm., Brown			**68033**
A4 B8 (8K2) 2.0 TDI			**2008-15**
CAHB, CGLD, CNHC	120	163	
After soot particulate filter, 236 mm., Brown			**68033**
In front of exhaust turbocharger, PR 7MM			**68093**
A4 B8 (8K2) 2.0 TDI			**2013-15**
CNHA	140	190	
In front of exhaust turbocharger, PR 7MM			**68093**
A4 B8 (8K2) 2.0 TDI quattro			**2008-12**
CAHA	125	170	
After soot particulate filter, 236 mm., Brown			**68033**
A4 B8 (8K2) 2.0 TDI quattro			**2008-15**
CAGA, CJCA	105	143	
After soot particulate filter, 236 mm., Brown			**68033**
A4 B8 (8K2) 2.0 TDI quattro			**2013-15**
CNHA	140	190	
In front of exhaust turbocharger, PR 7MM			**68093**
A4 B8 (8K2) 2.7 TDI			**2007-12**
CAMA, CGKA	140	190	
Engine CAMA, Engine CGKA, Before soot particulate filter			**68083**
A4 B8 (8K2) 2.7 TDI			**2007-12**
CAMB, CGKB	120	163	
Engine CGKB, Engine CAMB, Before soot particulate filter			**68083**
A4 B8 (8K2) 3.0 TDI			**2011-15**
CLAB	150	204	
PTC, 386 mm., Black			**68084**
A4 B8 (8K2) 3.0 TDI quattro			**2011-15**
CDUC, CKVB, CKVC	180	245	
Engine CDUC			**68084**
A4 B8 (8K2) 3.0 TDI quattro			**2007-12**
CAPA, CCLA, CCWA	176	240	
Engine CAPA, Engine CCLA, Engine CCWA, Before soot particulate filter			**68083**
Engine CAPA, Before catalytic converter, Before turbocharger			**68097**
A4 B8 (8K2) 3.0 TDI quattro			**2008-10**
CCWB	155	211	
Engine CCWB, Before soot particulate filter			**68083**
Before catalytic converter, Before turbocharger 336 mm., Black			**68097**
A4 B8 Avant (8K5) 2.0 TDI			**2008-15**
CAGA, CJCA, CMEA, CMFA	105	143	
After soot particulate filter, 236 mm., Brown			**68033**
A4 B8 Avant (8K5) 2.0 TDI			**2008-12**
CAHA	125	170	
After soot particulate filter, 236 mm., Brown			**68033**
A4 B8 Avant (8K5) 2.0 TDI			**2008-15**
CAGB, CJCB, CSUB	100	136	
After soot particulate filter, 236 mm., Brown			**68033**
CAGB, ->Ch.8K8A015000, ->Ch.8K8N005000, W/soot filter, W/manual transmission			**68083**
A4 B8 Avant (8K5) 2.0 TDI			**2008-15**
CAGC, CJCC	88	120	
After soot particulate filter, 236 mm., Brown			**68033**
A4 B8 Avant (8K5) 2.0 TDI			**2008-15**
CAHB, CGLD, CNHC	120	163	
After soot particulate filter, 236 mm., Brown			**68033**
In front of exhaust turbocharger, PR 7MM			**68093**
A4 B8 Avant (8K5) 2.0 TDI			**2013-15**
CNHA	140	190	
In front of exhaust turbocharger, PR 7MM			**68093**

AUDI Cont.

A4 B8 Avant (8K5) 2.0 TDI quattro			**2008-12**
CAHA	125	170	
After soot particulate filter, 236 mm., Brown			**68033**
A4 B8 Avant (8K5) 2.0 TDI quattro			**2008-15**
CAGA, CJCA	105	143	
After soot particulate filter, 236 mm., Brown			**68033**
A4 B8 Avant (8K5) 2.0 TDI quattro			**2013-15**
CNHA	140	190	
In front of exhaust turbocharger, PR 7MM			**68093**
A4 B8 Avant (8K5) 2.7 TDI			**2008-12**
CAMB, CGKB	120	163	
Engine CAMB, Engine CGKB, Before soot particulate filter			**68083**
A4 B8 Avant (8K5) 2.7 TDI			**2008-12**
CAMA, CGKA	140	190	
Engine CGKA, Engine CAMA, Before soot particulate filter			**68083**
A4 B8 Avant (8K5) 3.0 TDI			**2011-15**
CLAB	150	204	
PTC, 386 mm., Black			**68084**
A4 B8 Avant (8K5) 3.0 TDI quattro			**2011-15**
CDUC, CKVB, CKVC	180	245	
Engine CDUC			**68084**
A4 B8 Avant (8K5) 3.0 TDI quattro			**2008-12**
CAPA, CCLA, CCWA	176	240	
Engine CAPA, Engine CCLA, Engine CCWA, Before soot particulate filter			**68083**
Engine CAPA, Before catalytic converter, Before turbocharger			**68097**
A4 B8 Avant (8K5) 3.0 TDI quattro			**2008-10**
CCWB	155	211	
Engine CCWB, Before soot particulate filter			**68083**
Before catalytic converter, Before turbocharger 336 mm., Black			**68097**
A4 B9 (8W2, 8WC) 2.0 TDI			**2015 ->**
DESA, DETA, DFVA	140	190	
In front of exhaust turbocharger, 896 mm., Black			**68093**
A4 B9 (8W2, 8WC) 2.0 TDI quattro			**2015-19**
DESA, DETA, DFVA	140	190	
In front of exhaust turbocharger, 896 mm., Black			**68093**
A4 B9 Avant (8W5, 8WD) 2.0 TDI			**2015-18**
DESA, DETA, DFVA	140	190	
In front of exhaust turbocharger, 896 mm., Black			**68093**
A4 B9 Avant (8W5, 8WD) 2.0 TDI quattro			**2015-18**
DESA, DETA, DFVA	140	190	
In front of exhaust turbocharger, 896 mm., Black			**68093**
A5 (8T3) 2.0 TDI			**2013-17**
CNHA	140	190	
In front of exhaust turbocharger, PR 7MM			**68093**
A5 (8T3) 2.0 TDI			**2011-17**
CGLC	130	177	
In front of exhaust turbocharger, PR 7MM			**68093**
A5 (8T3) 2.0 TDI			**2008-12**
CAHA	125	170	
After soot particulate filter, 236 mm., Brown			**68033**
In front of exhaust turbocharger, PR 7MM			**68093**
A5 (8T3) 2.0 TDI			**2008-17**
CAHB, CGLD, CNHC	120	163	
After soot particulate filter, 236 mm., Brown			**68033**
In front of exhaust turbocharger, PR 7MM			**68093**
A5 (8T3) 2.0 TDI quattro			**2013-17**
CNHA	140	190	
In front of exhaust turbocharger, PR 7MM			**68093**
A5 (8T3) 2.0 TDI quattro			**2011-17**
CGLC	130	177	
In front of exhaust turbocharger, PR 7MM			**68093**
A5 (8T3) 2.0 TDI quattro			**2008-12**
CAHA	125	170	
After soot particulate filter, 236 mm., Brown			**68033**
In front of exhaust turbocharger, PR 7MM			**68093**
A5 (8T3) 2.7 TDI			**2007-12**
CAMA, CGKA	140	190	
Engine CGKA, Engine CAMA, 07.2007 ->, Before soot particulate filter			**68083**
A5 (8T3) 2.7 TDI			**2007-12**
CAMB, CGKB	120	163	
Engine CGKB, Engine CAMB, Before soot particulate filter			**68083**
A5 (8T3) 3.0 TDI			**2011-17**
CLAB	150	204	
PTC, 386 mm., Black			**68084**
A5 (8T3) 3.0 TDI quattro			**2011-17**
CDUC, CKVB, CKVC	180	245	
Engine CDUC			**68084**
A5 (8T3) 3.0 TDI quattro			**2007-12**
CAPA, CCWA	176	240	
Engine CCWA, Engine CAPA, Before soot particulate filter			**68083**
Engine CCWA, Before catalytic converter, Before turbocharger			**68097**

FAE

AUDI Cont.

A5 (8T3) 3.0 TDI quattro			**2008-10**
CCWB	155	211	
Engine CCWB, Before soot particulate filter			**68083**
Before catalytic converter, Before turbocharger 336 mm., Black			**68097**
A5 Cabriolet (8F7) 2.0 TDI			**2009-12**
CAHA	125	170	
After soot particulate filter, 236 mm., Brown			**68033**
A5 Cabriolet (8F7) 2.0 TDI			**2009-14**
CAHB, CGLD	120	163	
After soot particulate filter, 236 mm., Brown			**68033**
A5 Cabriolet (8F7) 2.7 TDI			**2009-12**
CGKA	140	190	
Engine CGKA, Before soot particulate filter			**68083**
A5 Cabriolet (8F7) 2.7 TDI			**2009-12**
CGKB	120	163	
Engine CGKB, Before soot particulate filter			**68083**
A5 Cabriolet (8F7) 3.0 TDI			**2011-17**
CLAB	150	204	
PTC, 386 mm., Black			**68084**
A5 Cabriolet (8F7) 3.0 TDI quattro			**2015-17**
CKVD	160	218	
Before turbocharger			**68084**
A5 Cabriolet (8F7) 3.0 TDI quattro			**2011-17**
CDUC, CKVC	180	245	
PTC, 386 mm., Black			**68084**
A5 Cabriolet (8F7) 3.0 TDI quattro			**2009-12**
CCWA	176	240	
Engine CCWA, Before soot particulate filter			**68083**
Before catalytic converter, Before turbocharger 336 mm., Black			**68097**
A5 Sportback (8Ta) 2.0 TDI			**2013-17**
CNHA	140	190	
In front of exhaust turbocharger, PR 7MM			**68093**
A5 Sportback (8Ta) 2.0 TDI			**2009-12**
CAHA	125	170	
After soot particulate filter, 236 mm., Brown			**68033**
In front of exhaust turbocharger, PR 7MM			**68093**
A5 Sportback (8Ta) 2.0 TDI			**2009-17**
CAHB, CGLD, CNHC	120	163	
After soot particulate filter, 236 mm., Brown			**68033**
A5 Sportback (8Ta) 2.0 TDI			**2009-17**
CAGB, CJCB, CSUB	100	136	
After soot particulate filter, 236 mm., Brown			**68033**
Engine CJCB, In front of exhaust turbocharger			**68093**
A5 Sportback (8Ta) 2.0 TDI			**2009-17**
CAGA, CJCA, CMEA, CMFA	105	143	
After soot particulate filter, 236 mm., Brown			**68033**
Engine CMFA, Engine CJCA, In front of exhaust turbocharger			**68093**
A5 Sportback (8Ta) 2.0 TDI quattro			**2013-17**
CNHA	140	190	
In front of exhaust turbocharger, PR 7MM			**68093**
A5 Sportback (8Ta) 2.0 TDI quattro			**2009-12**
CAHA	125	170	
After soot particulate filter, 236 mm., Brown			**68033**
A5 Sportback (8Ta) 2.7 TDI			**2009-12**
CAMA, CGKA	140	190	
Engine CGKA, Before soot particulate filter			**68083**
A5 Sportback (8Ta) 2.7 TDI			**2009-12**
CGKB	120	163	
Engine CGKB, Before soot particulate filter			**68083**
A5 Sportback (8Ta) 3.0 TDI			**2011-17**
CLAB	150	204	
PTC, 386 mm., Black			**68084**
A5 Sportback (8TA) 3.0 TDI quattro			**2015-17**
CKVD	160	218	
Before turbocharger			**68084**
A5 Sportback (8Ta) 3.0 TDI quattro			**2011-17**
CDUC, CKVB, CKVC	180	245	
Engine CDUC			**68084**
A5 Sportback (8Ta) 3.0 TDI quattro			**2009-12**
CCWA	176	240	
Engine CCWA, Before soot particulate filter			**68083**
Before catalytic converter, Before turbocharger 336 mm., Black			**68097**
A6 Allroad C6 (4FH) 2.7 TDI quattro			**2006-08**
BPP	132	180	
Before soot particulate filter, 04.2008 ->, PR 7MG, PR 7GG			**68025**
A6 Allroad C6 (4FH) 2.7 TDI quattro			**2006-11**
BSG, CAND	120	163	
Before soot particulate filter, 04.2008 ->, PR 7MG, PR 7GG			**68025**
A6 Allroad C6 (4FH) 2.7 TDI quattro			**2008-11**
CANC	140	190	
Before soot particulate filter, PR 7MG, PR 7GG			**68025**

AUDI Cont.

A6 Allroad C6 (4FH) 3.0 TDI quattro			**2006-08**
ASB	171	233	
Before soot particulate filter, 04.2008 ->, PR 7MG, PR 7GG			**68025**
Before catalytic converter, Before turbocharger 336 mm., Black			**68097**
A6 Allroad C6 (4FH) 3.0 TDI quattro			**2006-11**
BNG, CDYB	155	211	
Before soot particulate filter, 04.2008 ->, PR 7MG, PR 7GG			**68025**
Engine BNG, Before catalytic converter, Before turbocharger			**68097**
A6 Allroad C6 (4FH) 3.0 TDI quattro			**2008-11**
CDYA, CDYC	176	240	
Before soot particulate filter, PR 7MG, PR 7GG			**68025**
Engine CDYA, Before catalytic converter, Before turbocharger			**68097**
A6 Allroad C7 (4GH, 4GJ) 3.0 TDI quattro			**2014-18**
CRTF, CZVC	155	211	
Before soot particulate filter, 371 mm., Black			**68092**
A6 Allroad C7 (4GH, 4GJ) 3.0 TDI quattro			**2014-18**
CRTE, CZVA	160	218	
Before soot particulate filter, 371 mm., Black			**68092**
A6 Allroad C7 (4GH, 4GJ) 3.0 TDI quattro			**2014-18**
CRTD	200	272	
Before soot particulate filter, 371 mm., Black			**68092**
A6 Allroad C7 (4GH, 4GJ) 3.0 TDI quattro			**2015-18**
CZVF	140	190	
Before soot particulate filter, 371 mm., Black			**68092**
A6 Allroad C7 (4GH, 4GJ) 3.0 TDI quattro			**2012-14**
CLAA	150	204	
PTC, 386 mm., Black			**68084**
A6 Allroad C7 (4GH, 4GJ) 3.0 TDI quattro			**2012-16**
CDUD, CKVC	180	245	
Engine CDUD			**68084**
A6 C6 (4F2) 2.0 TDI			**2004-08**
BLB, BRE	103	140	
After soot particulate filter, 786 mm.			**68079**
Before soot particulate filter, 636 mm., Brown			**68090**
A6 C6 (4F2) 2.0 TDI			**2004-11**
BNA, BRF, CAGB	100	136	
After soot particulate filter, 786 mm.			**68079**
Before soot particulate filter, 636 mm., Brown			**68090**
Before soot particulate filter, 371 mm., Black			**68092**
A6 C6 (4F2) 2.0 TDI			**2005-06**
BVG	89	121	
After soot particulate filter, 786 mm.			**68079**
Before soot particulate filter, 636 mm., Brown			**68090**
A6 C6 (4F2) 2.0 TDI			**2008-11**
CAHA	125	170	
After soot particulate filter, 786 mm.			**68079**
Before soot particulate filter, 371 mm., Black			**68092**
A6 C6 (4F2) 2.0 TDI			**2009-11**
CAHB	120	163	
After soot particulate filter, 786 mm.			**68079**
Before soot particulate filter, 371 mm., Black			**68092**
A6 C6 (4F2) 2.7 TDI			**2004-08**
BPP	132	180	
Before soot particulate filter, Ch. 7F-8-140 062 ->, PR 7GG			**68025**
A6 C6 (4F2) 2.7 TDI			**2004-11**
BSG, CANB	120	163	
Before soot particulate filter, PR 7MG, PR 7GG			**68025**
A6 C6 (4F2) 2.7 TDI			**2008-11**
CANA	140	190	
Before soot particulate filter, PR 7MG			**68025**
A6 C6 (4F2) 2.7 TDI quattro			**2004-08**
BPP	132	180	
Before soot particulate filter, Ch. 7F-8-140 062 ->, PR 7GG			**68025**
A6 C6 (4F2) 2.7 TDI quattro			**2005-11**
BSG, CAND	120	163	
Before soot particulate filter, PR 7MG, PR 7GG			**68025**
A6 C6 (4F2) 2.7 TDI quattro			**2008-11**
CANC	140	190	
Before soot particulate filter, PR 7MG			**68025**
A6 C6 (4F2) 3.0 TDI quattro			**2004-06**
BMK	165	225	
Before soot particulate filter, Ch. 7F-8-140 062 ->, PR 7GG			**68025**
-> Ch. 4-8-140 061, Before catalytic converter, Before turbocharger			**68097**
A6 C6 (4F2) 3.0 TDI quattro			**2004-11**
BNG, CDYB	155	211	
Before soot particulate filter, PR 7MG, PR 7GG			**68025**
Engine BNG, -> Ch.4-8-140 061, Before catalytic converter, Before turbocharger			**68097**
A6 C6 (4F2) 3.0 TDI quattro			**2006-08**
ASB	171	233	
Before soot particulate filter, Ch. 7F-8-140 062 ->, PR 7GG			**68025**
Before catalytic converter, Before turbocharger 336 mm., Black			**68097**

AUDI Cont.

A6 C6 (4F2) 3.0 TDI quattro			**2008-11**
CDYA, CDYC	176	240	
Before soot particulate filter, PR 7MG			**68025**
Engine CDYA, Before catalytic converter, Before turbocharger			**68097**
A6 C6 Avant (4F5) 2.0 TDI			**2005-08**
BLB, BRE	103	140	
After soot particulate filter, 786 mm.			**68079**
Before soot particulate filter, 636 mm., Brown			**68090**
A6 C6 Avant (4F5) 2.0 TDI			**2005-11**
BNA, BRF, CAGB	100	136	
After soot particulate filter, 786 mm.			**68079**
Before soot particulate filter, 636 mm., Brown			**68090**
Before soot particulate filter, 371 mm., Black			**68092**
A6 C6 Avant (4F5) 2.0 TDI			**2005-06**
BVG	89	121	
After soot particulate filter, 786 mm.			**68079**
Before soot particulate filter, 636 mm., Brown			**68090**
A6 C6 Avant (4F5) 2.0 TDI			**2008-11**
CAHA	125	170	
After soot particulate filter, 786 mm.			**68079**
Before soot particulate filter, 371 mm., Black			**68092**
A6 C6 Avant (4F5) 2.0 TDI			**2009-11**
CAHB	120	163	
After soot particulate filter, 786 mm.			**68079**
Before soot particulate filter, 371 mm., Black			**68092**
A6 C6 Avant (4F5) 2.7 TDI			**2005-11**
BSG, CANB	120	163	
Before soot particulate filter, PR 7MG, PR 7GG			**68025**
A6 C6 Avant (4F5) 2.7 TDI			**2005-08**
BPP	132	180	
Before soot particulate filter, Ch. 7F-8-140 062 ->, PR 7GG			**68025**
A6 C6 Avant (4F5) 2.7 TDI			**2008-11**
CANA	140	190	
Before soot particulate filter, PR 7MG			**68025**
A6 C6 Avant (4F5) 2.7 TDI quattro			**2004-08**
BPP	132	180	
Before soot particulate filter, Ch. 7F-8-140 062 ->, PR 7GG			**68025**
A6 C6 Avant (4F5) 2.7 TDI quattro			**2005-11**
BSG, CAND	120	163	
Before soot particulate filter, PR 7MG, PR 7GG			**68025**
A6 C6 Avant (4F5) 2.7 TDI quattro			**2008-11**
CANC	140	190	
Before soot particulate filter, PR 7MG			**68025**
A6 C6 Avant (4F5) 3.0 TDI quattro			**2005-06**
BMK	165	225	
Before soot particulate filter, PR 7MG, PR 7GG			**68025**
Before catalytic converter, Before turbocharger 336 mm., Black			**68097**
A6 C6 Avant (4F5) 3.0 TDI quattro			**2005-11**
BNG, CDYB	155	211	
Before soot particulate filter, PR 7MG, PR 7GG			**68025**
Engine BNG, -> Ch.4-8-140 061, Before catalytic converter, Before turbocharger			**68097**
A6 C6 Avant (4F5) 3.0 TDI quattro			**2006-08**
ASB	171	233	
Before soot particulate filter, PR 7MG, PR 7GG			**68025**
Before catalytic converter, Before turbocharger 336 mm., Black			**68097**
A6 C6 Avant (4F5) 3.0 TDI quattro			**2008-11**
CDYA, CDYC	176	240	
Before soot particulate filter, PR 7MG			**68025**
Engine CDYA, Before catalytic converter, Before turbocharger			**68097**
A6 C7 (4G2, 4GC) 2.0 TDI			**2013-18**
CNHA, CZJA, DDDA	140	190	
Engine CNHA, In front of exhaust turbocharger			**68093**
A6 C7 (4G2, 4GC) 2.0 TDI quattro			**2015-18**
CNHA, DDDA	140	190	
In front of exhaust turbocharger, 896 mm., Black			**68093**
A6 C7 (4G2, 4GC) 3.0 TDI			**2014-18**
CTCB, CZVD	155	211	
After soot particulate filter, 236 mm., Brown			**68033**
Before soot particulate filter, 371 mm., Black			**68092**
A6 C7 (4G2, 4GC) 3.0 TDI			**2014-18**
CTCC, CZVB	160	218	
After soot particulate filter, 236 mm., Brown			**68033**
Before soot particulate filter, 371 mm., Black			**68092**
A6 C7 (4G2, 4GC) 3.0 TDI			**2010-18**
CLAB	150	204	
Engine CLAB, -> 12.2011			**68083**
PTC, 386 mm., Black			**68084**
A6 C7 (4G2, 4GC) 3.0 TDI quattro			**2014-18**
CRTF, CZVC	155	211	
Before soot particulate filter, 371 mm., Black			**68092**
A6 C7 (4G2, 4GC) 3.0 TDI quattro			**2014-18**
CRTE, CZVA	160	218	
Before soot particulate filter, 371 mm., Black			**68092**

AUDI Cont.

A6 C7 (4G2, 4GC) 3.0 TDI quattro			**2014-18**
CRTD	200	272	
Before soot particulate filter, 371 mm., Black			**68092**
A6 C7 (4G2, 4GC) 3.0 TDI quattro			**2011-18**
CLAA	150	204	
Engine CLAA, -> 12.2011			**68083**
PTC, 386 mm., Black			**68084**
A6 C7 (4G2, 4GC) 3.0 TDI quattro			**2011-18**
CDUC, CDUD, CKVB, CKVC	180	245	
Engine CKVB, Engine CDUC, -> 12.2011			**68083**
Engine CDUC			**68084**
A6 C7 Avant (4G5, 4GD) 2.0 TDI			**2013-18**
CNHA, CZJA, DDDA	140	190	
Engine CNHA, In front of exhaust turbocharger			**68093**
A6 C7 Avant (4G5, 4GD) 2.0 TDI quattro			**2015-18**
CNHA, DDDA	140	190	
In front of exhaust turbocharger, 896 mm., Black			**68093**
A6 C7 Avant (4G5, 4GD) 3.0 TDI			**2011-18**
CLAB	150	204	
Engine CLAB, 06.2011 - 12.2011			**68083**
PTC, 386 mm., Black			**68084**
A6 C7 Avant (4G5, 4GD) 3.0 TDI			**2014-18**
CTCB, CZVD	155	211	
After soot particulate filter, 236 mm., Brown			**68033**
Before soot particulate filter, 371 mm., Black			**68092**
A6 C7 Avant (4G5, 4GD) 3.0 TDI			**2014-18**
CTCC, CZVB	160	218	
After soot particulate filter, 236 mm., Brown			**68033**
Before soot particulate filter, 371 mm., Black			**68092**
A6 C7 Avant (4G5, 4GD) 3.0 TDI quattro			**2011-18**
CLAA	150	204	
Engine CLAA, -> 12.2011			**68083**
PTC, 386 mm., Black			**68084**
A6 C7 Avant (4G5, 4GD) 3.0 TDI quattro			**2011-18**
CDUC, CDUD, CKVB, CKVC	180	245	
Engine CDUC, Engine CKVB, -> 12.2011			**68083**
Engine CDUC			**68084**
A6 C7 Avant (4G5, 4GD) 3.0 TDI quattro			**2014-18**
CRTF, CZVC	155	211	
Before soot particulate filter, 371 mm., Black			**68092**
A6 C7 Avant (4G5, 4GD) 3.0 TDI quattro			**2014-18**
CRTE, CZVA	160	218	
Before soot particulate filter, 371 mm., Black			**68092**
A6 C7 Avant (4G5, 4GD) 3.0 TDI quattro			**2014-18**
CRTD	200	272	
Before soot particulate filter, 371 mm., Black			**68092**
A7 Sportback (4GA, 4GF) 3.0 TDI			**2014-18**
CTCC, CZVB	160	218	
After soot particulate filter, 236 mm., Brown			**68033**
A7 Sportback (4GA, 4GF) 3.0 TDI			**2015-18**
CZVE	140	190	
Before soot particulate filter, 371 mm., Black			**68092**
A7 Sportback (4GA, 4GF) 3.0 TDI			**2015-18**
CZVC, CZVD	155	211	
Before soot particulate filter, 371 mm., Black			**68092**
A7 Sportback (4GA, 4GF) 3.0 TDI			**2010-15**
CLAB	150	204	
Engine CLAB, -> 12.2011			**68083**
PTC, 386 mm., Black			**68084**
A7 Sportback (4GA, 4GF) 3.0 TDI quattro			**2014-18**
CRTE, CZVA	160	218	
Before soot particulate filter, 371 mm., Black			**68092**
A7 Sportback (4GA, 4GF) 3.0 TDI quattro			**2014-18**
CRTD	200	272	
Before soot particulate filter, 371 mm., Black			**68092**
A7 Sportback (4GA, 4GF) 3.0 TDI quattro			**2014-18**
CRTF, CTCB, CZVC, CZVD	155	211	
After soot particulate filter, 236 mm., Brown			**68033**
Before soot particulate filter, 371 mm., Black			**68092**
A7 Sportback (4GA, 4GF) 3.0 TDI quattro			**2015-18**
CZVE, CZVF	140	190	
Before soot particulate filter, 371 mm., Black			**68092**
A7 Sportback (4GA, 4GF) 3.0 TDI quattro			**2010-16**
CDUC, CDUD, CKVB, CKVC	180	245	
Engine CDUC, -> 12.2011			**68083**
Engine CDUC			**68084**
A7 Sportback (4GA, 4GF) 3.0 TDI quattro			**2010-15**
CLAA	150	204	
Engine CLAA, 05.2011 - 12.2011			**68083**
PTC, 386 mm., Black			**68084**
A8 D3 (4E2, 4E8) 3.0 TDI quattro			**2003-10**
ASB	171	233	
Before catalytic converter, Before turbocharger 336 mm., Black			**68097**

FAE

AUDI Cont.

A8 D3 (4E2, 4E8) 3.0 TDI quattro			**2003-10**
BNG	155	211	
Before catalytic converter, Before turbocharger 336 mm., Black			**68097**
A8 D4 (4H2, 4H8, 4HC, 4HL) 3.0 TDI			**2011-13**
CLAB	150	204	
Engine CLAB, -> 03.2012			**68083**
PTC, 386 mm., Black			**68084**
A8 D4 (4H2, 4H8, 4HC, 4HL) 3.0 TDI quattro			**2010-15**
CDTB, CTBB	155	211	
After soot particulate filter, 236 mm., Brown			**68033**
Engine CDTB, -> 03.2012			**68083**
PTC, 386 mm., Black			**68084**
A8 D4 (4H2, 4H8, 4HC, 4HL) 3.0 TDI quattro			**2015-18**
CTBD	193	262	
After soot particulate filter, 236 mm., Brown			**68033**
A8 D4 (4H2, 4H8, 4HC, 4HL) 3.0 TDI quattro			**2010-18**
CDTA, CDTC, CMHA	184	250	
Engine CDTA, -> 03.2012			**68083**
Engine CDTA			**68084**
A8 D4 (4H2, 4H8, 4HC, 4HL) 3.0 TDI quattro			**2013-18**
CTBA	190	258	
After soot particulate filter, 236 mm., Brown			**68033**
Q2 (GAB, GAG) 30 TDI			**2018 ->**
DGTE	85	115	
Before catalytic converter			**68019**
With factory fitted soot -/particulate filter, 696 mm.			**68059**
Engine DGTE, Before soot particulate filter			**68078**
Q5 (8RB) 2.0 TDI			**2010-17**
CJCB, CSUB	100	136	
In front of exhaust turbocharger, PR 7MM			**68093**
Q5 (8RB) 2.0 TDI			**2010-13**
CJCA	105	143	
In front of exhaust turbocharger, PR 7MM			**68093**
Q5 (8RB) 2.0 TDI			**2013-17**
CJCD, CSUA	110	150	
In front of exhaust turbocharger, PR 7MM			**68093**
Q5 (8RB) 2.0 TDI quattro			**2013-17**
CNHA	140	190	
In front of exhaust turbocharger, PR 7MM			**68093**
Q5 (8RB) 2.0 TDI quattro			**2008-12**
CAHA, CGLB, CMGA	125	170	
After soot particulate filter, 236 mm., Brown			**68033**
In front of exhaust turbocharger, PR 7MM			**68093**
Q5 (8RB) 2.0 TDI quattro			**2009-13**
CAGA, CJCA	105	143	
After soot particulate filter, 236 mm., Brown			**68033**
In front of exhaust turbocharger, PR 7MM			**68093**
Q5 (8RB) 2.0 TDI quattro			**2009-17**
CAGB, CJCB, CSUB	100	136	
After soot particulate filter, 236 mm., Brown			**68033**
In front of exhaust turbocharger, PR 7MM			**68093**
Q5 (8RB) 2.0 TDI quattro			**2008-17**
CAHB, CGLA, CGLD, CNHC	120	163	
After soot particulate filter, 236 mm., Brown			**68033**
In front of exhaust turbocharger, PR 7MM			**68093**
Q5 (8RB) 2.0 TDI quattro			**2012-17**
CGLC, CMGB	130	177	
In front of exhaust turbocharger, PR 7MM			**68093**
Q5 (8RB) 2.0 TDI quattro			**2013-17**
CJCD, CSUA	110	150	
In front of exhaust turbocharger, PR 7MM			**68093**
Q5 (8RB) 3.0 TDI quattro			**2013-17**
CTBA	190	258	
After soot particulate filter, 236 mm., Brown			**68033**
Q5 (8RB) 3.0 TDI quattro			**2012-17**
CTBC	184	250	
After soot particulate filter, 236 mm., Brown			**68033**
Q5 (8RB) 3.0 TDI quattro			**2008-17**
CCWA, CPNB	176	240	
Engine CCWA, Before soot particulate filter			**68083**
Before catalytic converter, Before turbocharger 336 mm., Black			**68097**
Q5 (8RB) 3.0 TDI quattro			**2008-12**
CCWB	155	211	
Engine CCWB, Before soot particulate filter			**68083**
Before catalytic converter, Before turbocharger 336 mm., Black			**68097**
Q5 Van (8RB) 2.0 TDI quattro			**2008-12**
CAHA, CGLB	125	170	
After soot particulate filter, 236 mm., Brown			**68033**
Q5 Van (8RB) 3.0 TDI quattro			**2013-17**
CTBA	190	258	
After soot particulate filter, 236 mm., Brown			**68033**
Q7 (4LB) 3.0 TDI quattro			**2006-08**
BUG	171	233	
Before catalytic converter, Before turbocharger 336 mm., Black			**68097**

AUDI Cont.

Q7 (4LB) 3.0 TDI quattro			**2006-10**
BUN, CASB	155	211	
Engine BUN, Before catalytic converter, Before turbocharger			**68097**
Q7 (4LB) 3.0 TDI quattro			**2007-15**
CASA, CCMA, CJGA, CNRB	176	240	
Engine CJGA			**68084**
Engine CASA, Before catalytic converter, Before turbocharger			**68097**
Q7 (4LB) 3.0 TDI quattro			**2010-15**
CJGC, CJMA	150	204	
Engine CJGC			**68084**
Q7 (4LB) 3.0 TDI quattro			**2009-12**
CATA	165	224	
Before catalytic converter, Before turbocharger 336 mm., Black			**68097**
Q7 (4LB) 4.2 TDI quattro			**2007-09**
BTR	240	326	
Engine BTR, Before soot particulate filter, Left			**68068**
Q7 (4LB) 4.2 TDI quattro			**2009-15**
CCFA, CCFC	250	340	
Engine CCFC, 05.2010 ->, Before soot particulate filter, Left			**68068**
Engine CCFA, 06.2009 ->, Before soot particulate filter, Left			**68068**
Q7 (4LB) 6.0 TDI quattro			**2008-14**
CCGA	368	500	
Engine CCGA, Before catalytic converter, Left			**68068**
Q7 (4MB, 4MG) 3.0 TDI e-tron quattro			**2015-19**
CVZA	190	258	
Before soot particulate filter, 371 mm., Black			**68092**
Q7 (4MB, 4MG) 3.0 TDI quattro			**2015-19**
CRTC	200	272	
Before soot particulate filter, 371 mm., Black			**68092**
Q7 (4MB, 4MG) 3.0 TDI quattro			**2015-19**
CVMD	183	249	
Before soot particulate filter, 371 mm., Black			**68092**
Q7 (4MB, 4MG) 3.0 TDI quattro			**2015-19**
CRTE, CZZA	160	218	
Before soot particulate filter, 371 mm., Black			**68092**
Q7 (4MB, 4MG) 3.0 TDI quattro			**2015-19**
CZZB	155	211	
Before soot particulate filter, 371 mm., Black			**68092**
Q7 (4MB, 4MG) 3.0 TDI quattro			**2015-19**
CUEA	190	258	
Before soot particulate filter, 371 mm., Black			**68092**
Q7 (4MB, 4MG) 45 TDI quattro			**2019 ->**
CVMD	183	249	
Before soot particulate filter, 371 mm., Black			**68092**
Q7 Van (4MB, 4MG) 3.0 TDI quattro			**2015-19**
CZZA, CZZB	160	218	
Before soot particulate filter, 371 mm., Black			**68092**
Q7 Van (4MB, 4MG) 3.0 TDI quattro			**2015-19**
CRTC	200	272	
Before soot particulate filter, 371 mm., Black			**68092**
TT (8J3) 2.0 TDI quattro			**2008-14**
CBBB, CFGB	125	170	
Engine CBBB, -> 06.2010, Ch.8J-9-000 001-Ch.8J-A-100 000, Before turbocharger			**68001**
Engine CBBB, Before soot particulate filter			**68002**
Engine CBBB, 06.2010 ->; After soot particulate filter			**68005**
TT (FV3, FVP) 2.0 TDI			**2014 ->**
CUNA	135	184	
In front of exhaust turbocharger, 566 mm., Black			**68007**
TT Roadster (8J9) 2.0 TDI quattro			**2008-14**
CBBB, CFGB	125	170	
Engine CBBB, 06.2010 ->, Ch.8J-9-000 001-Ch.8J-A-100 000, Before turbocharger			**68001**
Engine CBBB, Before soot particulate filter			**68002**
Engine CBBB, 06.2008 ->; After soot particulate filter			**68005**

CHEVROLET

Cruze (J300) 1.7 D			**2012 ->**
LUD	96	131	
Before catalytic converter, 385 mm., Black			**68096**
Cruze Fastback (J305) 1.7 D			**2012-15**
LUD	96	131	
Before catalytic converter, 385 mm., Black			**68096**
Cruze Station Wagon (J308) 1.7 TD			**2012 ->**
LUD	96	131	
Before catalytic converter, 385 mm., Black			**68096**
Malibu (V300) 2.0 D			**2012 ->**
LBS	118	160	
-> 12.2013, After catalytic converter			**68082**
Before particulate filter, 225,2 mm., Black			**68091**
Trax I Tracker 1.7 TD			**2012 ->**
LUD	96	131	
Before catalytic converter, 385 mm., Black			**68096**

CHEVROLET Cont.

Trax I Tracker 1.7 TD AWD			**2012 ->**
LUD	96	131	
Before catalytic converter, 385 mm., Black			**68096**

CITROËN

Jumper Bus I Relay 3.0 HDi 155			**2010 ->**
F1CE0481D (F30DT)	115	157	
Engine F1CE0481D (F30DT)			**68073**
Engine F1CE0481D (F30DT), Particulate Filter			**68074**
Jumper Bus I Relay 3.0 HDi 160			**2006 ->**
F1CE0481D (F30DT)	116	157	
Engine F1CE0481D (F30DT)			**68073**
Engine F1CE0481D (F30DT), Particulate Filter			**68074**
Jumper Chassis I Relay 3.0 HDi 160			**2006 ->**
F1CE0481D (F30DT)	116	157	
Engine F1CE0481D (F30DT)			**68073**
Engine F1CE0481D (F30DT), Particulate Filter			**68074**
Jumper Van I Relay 3.0 HDi 155			**2010 ->**
F1CE0481D (F30DT)	115	156	
Engine F1CE0481D (F30DT)			**68073**
Engine F1CE0481D (F30DT), Particulate Filter			**68074**
Jumper Van I Relay 3.0 HDi 160			**2006 ->**
F1CE0481D (F30DT)	116	157	
Engine F1CE0481D (F30DT)			**68073**
Engine F1CE0481D (F30DT), Particulate Filter			**68074**
Nemo Monospace 1.3 HDi 75			**2010 ->**
FHZ (F13DTE5)	55	75	
Engine FHZ (F13DTE5)			**68080**
Nemo Van/MPV (AA) 1.3 HDi 75			**2010 ->**
FHZ (F13DTE5)	55	75	
Engine FHZ (F13DTE5)			**68080**

FIAT

500L (351, 352) 1.4 (199LYF1B)			**2013 ->**
940 B7.000	88	120	
After catalytic converter			**68075**
500L (351, 352) 1.4 LPG (199LYF1B)			**2014 ->**
940 B7.000	88	120	
After catalytic converter			**68075**
500L (351, 352) 1.6 D Multijet (199LYD1B)			**2012-18**
199 B5.000	77	105	
PTC, 230,2 mm., Black			**68037**
500L (351, 352) 1.6 D Multijet (199LYE1B)			**2013 ->**
552 80 444, 940 C1.000, 955 A3.000	88	120	
PTC, 230,2 mm., Black			**68037**
Engine 955 A3.000, Before catalytic converter			**68075**
Doblo Monospace (119, 223) 1.3 D Multijet			**2005 ->**
223 A9.000	62	84	
Particulate Filter, 1165.2 mm., Black			**68044**
Doblo Monospace (119, 223) 1.9 D Multijet			**2005 ->**
186 A9.000	88	120	
After soot particulate filter, 855,2 mm., Black			**68086**
Doblo Monospace (119, 223) 1.9 JTD			**2003 ->**
223 A7.000, 223 B1.000	77	105	
After soot particulate filter, 855,2 mm., Black			**68086**
Doblo Monospace (119, 223) 1.9 JTD (223AXE1A)			**2001 ->**
182 B9.000, 223 B2.000	74	100	
After soot particulate filter, 855,2 mm., Black			**68086**
Doblo MPV (119, 223) 1.3 JTD 16V			**2004-05**
188 A9.000	51	70	
Particulate Filter, 1165.2 mm., Black			**68044**
Doblo Van/MPV (223) 1.3 D Multijet			**2005-10**
199 A2.000	55	75	
Particulate Filter, 1165.2 mm., Black			**68044**
Doblo Van/MPV (223) 1.3 JTD 16V			**2004-06**
188 A8.000, 188 A9.000	51	70	
Particulate Filter, 1165.2 mm., Black			**68044**
Doblo Van/MPV (223) 1.3 JTD 16V Multijet			**2006 ->**
223 A9.000	62	84	
Particulate Filter, 1165.2 mm., Black			**68044**
Doblo Van/MPV (223) 1.9 JTD			**2003 ->**
223 A7.000, 223 B1.000	77	105	
After soot particulate filter, 855,2 mm., Black			**68086**
Doblo Van/MPV (223) 1.9 JTD (223ZXE1A)			**2001 ->**
182 B9.000	74	100	
After soot particulate filter, 855,2 mm., Black			**68086**
Doblo Van/MPV (223) 1.9 JTD Multijet			**2006 ->**
186 A9.000	88	120	
After soot particulate filter, 855,2 mm., Black			**68086**
Ducato Bus (250) 110 Multijet 2,3 D			**2011 ->**
F1AE3481G	83	113	
01.2014 ->, After catalytic converter			**68081**

FIAT Cont.

Ducato Bus (250) 115 Multijet 2,0 D		**2011 ->**
250 A1.000, 250 A2.000	85	116
After catalytic converter, 315,2 mm., Black		**68081**
Ducato Bus (250) 130 Multijet 2,3 D		**2011 ->**
F1AE0481N, F1AE3481D, F1AGL411D, F1AGL411M	96	131
01.2014 ->, After catalytic converter		**68081**
Ducato Bus (250) 150 Multijet 2,3 D		**2011 ->**
F1AE3481E	109	148
01.2014 ->, After catalytic converter		**68081**
Ducato Bus (250) 150 Multijet 2,3 D		**2015 ->**
F1AGL411A, F1AGL411C	110	150
After catalytic converter, 315,2 mm., Black		**68081**
Ducato Bus (250) 150 Multijet 3,0 D		**2010 ->**
F1CE3481N	107	146
Engine F1CE3481N		**68073**
Engine F1CE3481N, Particulate Filter		**68074**
Ducato Bus (250) 160 Multijet 3,0 D		**2006 ->**
F1CE0481D, F1CE3481M	116	158
Engine F1CE0481D, Engine F1CE3481M		**68073**
Engine F1CE3481M, Engine F1CE0481D, Particulate Filter		**68074**
Ducato Bus (250) 160 Multijet 3,0 D		**2006 ->**
F1CE0481D	115	156
Engine F1CE0481D		**68073**
Engine F1CE0481D, Particulate Filter		**68074**
Ducato Bus (250) 160 Multijet 3,0 D 4x4		**2006 ->**
F1CE0481D, F1CE3481M	116	158
Engine F1CE3481M, Engine F1CE0481D		**68073**
Engine F1CE0481D, Engine F1CE3481M, Particulate Filter		**68074**
Ducato Bus (250) 180 Multijet 3,0 D		**2011 ->**
F1CE3481E	130	177
Engine F1CE3481E		**68073**
Engine F1CE3481E, Particulate Filter		**68074**
01.2014 ->, After catalytic converter		**68081**
Ducato Chassis (250) 110 Multijet 2,3 D		**2011 ->**
F1AE3481G	83	113
01.2014 ->, After catalytic converter		**68081**
Ducato Chassis (250) 115 Multijet 2,0 D		**2011 ->**
250 A1.000, 250 A2.000	85	116
After catalytic converter, 315,2 mm., Black		**68081**
Ducato Chassis (250) 130 Multijet 2,3 D		**2006 ->**
F1AE0481N, F1AE3481D, F1AGL411D	96	131
01.2014 ->, After catalytic converter		**68081**
Ducato Chassis (250) 150 Multijet 2,3 D		**2011 ->**
F1AE3481E	109	148
01.2014 ->, After catalytic converter		**68081**
Ducato Chassis (250) 150 Multijet 3,0 D		**2010 ->**
F1CE3481N	107	146
Engine F1CE3481N		**68073**
Engine F1CE3481N, Particulate Filter		**68074**
Ducato Chassis (250) 160 Multijet 3,0 D		**2006 ->**
F1CE0481D	116	158
Engine F1CE0481D		**68073**
Engine F1CE0481D, Particulate Filter		**68074**
Ducato Chassis (250) 160 Multijet 3,0 D		**2006-11**
F1CE3481M	115	156
Engine F1CE3481M		**68073**
Engine F1CE3481M, Particulate Filter		**68074**
Ducato Chassis (250) 180 Multijet 3,0 D		**2011 ->**
F1CE3481E	130	177
Engine F1CE3481E		**68073**
Engine F1CE3481E, Particulate Filter		**68074**
01.2014 ->, After catalytic converter		**68081**
Ducato Van (250) 110 Multijet 2,3 D		**2011 ->**
F1AE3481G	83	113
01.2014 ->, After catalytic converter		**68081**
Ducato Van (250) 115 Multijet 2,0 D		**2011 ->**
250 A1.000, 250 A2.000	85	116
After catalytic converter, 315,2 mm., Black		**68081**
Ducato Van (250) 130 Multijet 2,3 D		**2011 ->**
F1AE0481N, F1AE3481D, F1AGL411D	96	131
01.2014 ->, After catalytic converter		**68081**
Ducato Van (250) 150 Multijet 2,3 D		**2011 ->**
F1AE3481E	109	148
01.2014 ->, After catalytic converter		**68081**
Ducato Van (250) 150 Multijet 3,0 D		**2010 ->**
F1CE3481N	107	146
Engine F1CE3481N		**68073**
Engine F1CE3481N, Particulate Filter		**68074**
Ducato Van (250) 160 Multijet 3,0 D		**2006 ->**
F1CE0481D	116	158
Engine F1CE0481D		**68073**
Engine F1CE0481D, Particulate Filter		**68074**

FAE

FIAT Cont.

Ducato Van (250) 160 Multijet 3,0 D		**2006-11**
F1CE3481M	115	156
Engine F1CE3481M		**68073**
Engine F1CE3481M, Particulate Filter		**68074**
Ducato Van (250) 160 Multijet 3,0 D 4x4		**2006 ->**
F1CE0481D, F1CE3481M	116	158
Engine F1CE3481M, Engine F1CE0481D		**68073**
Engine F1CE3481M, Engine F1CE0481D, Particulate Filter		**68074**
Ducato Van (250) 180 Multijet 3,0 D		**2011 ->**
F1CE3481E	130	177
Engine F1CE3481E		**68073**
Engine F1CE3481E, Particulate Filter		**68074**
01.2014 ->, After catalytic converter		**68081**
Fiorino Van/MPV (225) 1.3 D Multijet (225BXD1A, 225BXB1A,		**2007 ->**
199 A2.000, 199 A9.000	55	75
Engine 199 A9.000, Euro 5		**68080**
Grande Punto (199) 1.3 D Multijet		**2005 ->**
199 A2.000	55	75
Before soot particulate filter, Before catalytic converter		**68061**
After soot particulate filter, 485,2 mm., Black		**68080**
Grande Punto (199) 1.3 D Multijet		**2008 ->**
199 B2.000	51	69
Before soot particulate filter, Before catalytic converter		**68061**
Grande Punto (199) 1.3 D Multijet		**2010 ->**
199 B4.000, 223 A9.000	62	84
Engine 223 A9.000		**68061**
Grande Punto (199) 1.3 D Multijet (199.AXD11, 199.AXD1A,		**2005-10**
199 A3.000	66	90
Before soot particulate filter, Before catalytic converter		**68061**
Grande Punto (199) 1.6 D Multijet		**2008 ->**
955 A3.000	88	120
Before catalytic converter		**68075**
Multipla (186) 1.9 JTD (186AXE1A)		**2002-10**
186 A9.000	88	120
Particulate Filter, 1165.2 mm., Black		**68044**
Multipla (186) 1.9 JTD 115		**2002-10**
186 A8.000	85	115
Particulate Filter, 1165.2 mm., Black		**68044**
Punto (199) 1.3 D Multijet		**2013 ->**
199 B8.000	59	80
After soot particulate filter, 485,2 mm., Black		**68080**
Punto (199) 1.3 D Multijet		**2012 ->**
199 A2.000, 199 A9.000	55	75
After soot particulate filter, 485,2 mm., Black		**68080**
Punto (199) 1.3 D Multijet		**2012 ->**
199 B4.000	62	84
After soot particulate filter, 485,2 mm., Black		**68080**
Punto (199) 1.3 D Multijet		**2012 ->**
199 B1.000, 330 A1.000	70	95
After soot particulate filter, 485,2 mm., Black		**68080**
Punto Evo (199) 1.3 D Multijet		**2009-12**
199 B4.000, 223 A9.000	62	84
Engine 223 A9.000, Before soot particulate filter		**68061**
Engine 199 B4.000, Euro 5		**68080**
Punto Evo (199) 1.3 D Multijet		**2009-12**
199 B1.000	70	95
After soot particulate filter, 485,2 mm., Black		**68080**
Punto Evo (199) 1.3 D Multijet		**2008-12**
199 B2.000	51	69
Before catalytic converter, Before soot particulate filter		**68061**
Punto Evo (199) 1.3 D Multijet (199AXC1A, 199BXC1A, 199AXT1A,		**2009-12**
199 A2.000, 199 A9.000	55	75
Engine 199A2000, Before catalytic converter, Before soot particulate filter		**68061**
Engine 199 A9.000, Euro 5		**68080**
Punto Evo (199) 1.3 D Multijet (199AXD1B, 199AXD1A, 199BXD1B,		**2009-12**
199 A3.000	66	90
Before catalytic converter, Before soot particulate filter		**68061**
Punto Evo (199) 1.6 D Multijet		**2009-12**
955 A3.000	88	120
Before catalytic converter		**68075**
Qubo (225) 1.3 D Multijet (225CXB1A, 225AXB1A, 225CXB11,		**2008 ->**
199 A2.000, 199 A9.000	55	75
Engine 199 A9.000, Euro 5		**68080**
Stilo (192) 1.9 D Multijet		**2005-06**
192 A8.000	88	120
Particulate Filter, 1165.2 mm., Black		**68044**
Stilo (192) 1.9 JTD (192AXS1B, 192BXS1B)		**2004-06**
192 B5.000	66	90
Particulate Filter, 1165.2 mm., Black		**68044**
Stilo (192) 1.9 JTD (192XE1A)		**2001-06**
192 A1.000, 192 B4.000, 937 A7.000	85	115
Particulate Filter, 1165.2 mm., Black		**68044**

LANCIA

Delta III (844) 1.4 Bifuel (844.AXA1A)			**2011-14**
198 A4.000	88	120	
After catalytic converter			**68075**
Thesis (841) 2.4 D Multijet (841.AXN111, 841.AXH110)			**2006-09**
841 P.000	136	185	
After soot particulate filter, 855,2 mm., Black			**68086**
Thesis (841) 2.4 JTD (841.AXE1B0, 841.AXH110)			**2003-09**
841 G.000	129	175	
After soot particulate filter, 855,2 mm., Black			**68086**
Thesis (841) 2.4 JTD (841.AXE1B0, 841.AXH110)			**2003-09**
841 M.000, 841 N.000	120	163	
After soot particulate filter, 855,2 mm., Black			**68086**
Thesis (841) 2.4 JTD (841AXD1B02)			**2002-09**
841 C.000	110	150	
After soot particulate filter, 855,2 mm., Black			**68086**

MAN

Tge Chassis (UZ) 2.0 TDI			**2016 ->**
DAUB, DNAD	75	102	
Engine DAUB, With factory fitted soot -/particulate filter, 696 mm.			**68059**
Tge Chassis (UZ) 2.0 TDI			**2016 ->**
DAUA, DNAE	103	140	
Engine DAUA, With factory fitted soot -/particulate filter, 696 mm.			**68059**
Tge Chassis (UZ) 2.0 TDI			**2016 ->**
DAVA, DMZB	130	177	
Engine DAVA, With factory fitted soot -/particulate filter, 696 mm.			**68059**
Tge Chassis (UZ) 2.0 TDI AWD			**2017 ->**
DAUA, DNAE	103	140	
Engine DAUA, With factory fitted soot -/particulate filter, 696 mm.			**68059**
Tge Chassis (UZ) 2.0 TDI AWD			**2017 ->**
DAVA, DMZB	130	177	
Engine DAVA, With factory fitted soot -/particulate filter, 696 mm.			**68059**
Tge Van 2.0 TDI (01V, 03V, 36V, UYB, UYC, UYD)			**2017 ->**
DAUB, DNAD	75	102	
Engine DAUB, With factory fitted soot -/particulate filter, 696 mm.			**68059**
Tge Van 2.0 TDI (01V, 03V, 36V, UYB, UYC, UYD)			**2017 ->**
DAUA, DNAE	103	140	
Engine DAUA, With factory fitted soot -/particulate filter, 696 mm.			**68059**
Tge Van 2.0 TDI (01V, 03V, 36V, UYB, UYC, UYD)			**2017 ->**
DAVA, DMZB	130	177	
Engine DAVA, With factory fitted soot -/particulate filter, 696 mm.			**68059**
Tge Van 2.0 TDI AWD (02V, 04V, 37V, UYB, UYC, UYD)			**2017 ->**
DAUA, DNAE	103	140	
Engine DAUA, With factory fitted soot -/particulate filter, 696 mm.			**68059**
Tge Van 2.0 TDI AWD (02V, 04V, 37V, UYB, UYC, UYD)			**2017 ->**
DAVA, DMZB	130	177	
Engine DAVA, With factory fitted soot -/particulate filter, 696 mm.			**68059**

MERCEDES-BENZ

CLA Coupe (C117) CLA 200 CDI (117.301)			**2013-14**
OM 651.901	100	136	
Exhaust turbocharger, 257,3 mm.			**68031**
CLA Coupe (C117) CLA 200 CDI / d (117.308)			**2014-19**
OM 651.930	100	136	
Exhaust turbocharger, 257,3 mm.			**68031**
CLA Coupe (C117) CLA 200 CDI / d 4-matic (117.302)			**2014-19**
OM 651.930	100	136	
Exhaust turbocharger, 257,3 mm.			**68031**
CLA Coupe (C117) CLA 220 CDI / d (117.303)			**2014-19**
OM 651.930	130	177	
Exhaust turbocharger, 257,3 mm.			**68031**
CLA Coupe (C117) CLA 220 CDI / d (117.303)			**2013-19**
OM 651.930	125	170	
Exhaust turbocharger, 257,3 mm.			**68031**
CLA Coupe (C117) CLA 220 CDI / d (117.303)			**2013-19**
OM 651.930	120	163	
Exhaust turbocharger, 257,3 mm.			**68031**
CLA Coupe (C117) CLA 220 CDI / d 4-matic (117.305)			**2014-19**
OM 651.930	120	163	
Exhaust turbocharger, 257,3 mm.			**68031**
CLA Coupe (C117) CLA 220 CDI / d 4-matic (117.305)			**2014-19**
OM 651.930	130	177	
Exhaust turbocharger, 257,3 mm.			**68031**
CLA Coupe (C117) CLA 220 CDI 4-matic (117.305)			**2014-19**
OM 651.930	125	170	
Exhaust turbocharger, 257,3 mm.			**68031**
CLA Shooting Brake (X117) CLA 200 CDI / d (117.908)			**2015-19**
OM 651.930	100	136	
Exhaust turbocharger, 257,3 mm.			**68031**
CLA Shooting Brake (X117) CLA 200 CDI / d 4-matic (117.902)			**2015-19**
OM 651.930	100	136	
Exhaust turbocharger, 257,3 mm.			**68031**

MERCEDES-BENZ Cont.

CLA Shooting Brake (X117) CLA 220 CDI / d (117.903)			**2015-19**
OM 651.930	130	177	
Exhaust turbocharger, 257,3 mm.			**68031**
CLA Shooting Brake (X117) CLA 220 CDI / d (117.903)			**2015-19**
OM 651.930	120	163	
Exhaust turbocharger, 257,3 mm.			**68031**
CLA Shooting Brake (X117) CLA 220 CDI / d 4-matic (117.905)			**2015-19**
OM 651.930	130	177	
Exhaust turbocharger, 257,3 mm.			**68031**
CLA Shooting Brake (X117) CLA 220 CDI / d 4-matic (117.905)			**2015-19**
OM 651.930	120	163	
Exhaust turbocharger, 257,3 mm.			**68031**
Clase A (W169) A 160 CDI (169.006, 169.306)			**2004-12**
OM 640.942	60	82	
-> 04.2012, After soot particulate filter			**68050**
Engine 30757509 ->, Before turbocharger, 04.2011 ->			**68051**
-> 04.2012, Euro 5, Before catalytic converter, Without soot filter			**68053**
Before soot particulate filter, 597,3 mm., Black			**68054**
Clase A (W169) A 180 CDI (169.007, 169.307)			**2004-12**
OM 640.940	80	109	
-> 04.2012, After soot particulate filter			**68050**
Before turbocharger			**68051**
Before turbocharger, Ch. A 107854 ->			**68052**
-> 04.2012, Euro 5, Before catalytic converter, Without soot filter			**68053**
Before soot particulate filter, 597,3 mm., Black			**68054**
Clase A (W169) A 200 CDI (169.008, 169.308)			**2004-12**
OM 640.941	103	140	
-> 04.2012, After soot particulate filter			**68050**
Before turbocharger			**68051**
Before turbocharger, Ch. A 107854 ->			**68052**
-> 04.2012, Euro 5, Before catalytic converter, Without soot filter			**68053**
Before soot particulate filter, 597,3 mm., Black			**68054**
Clase A (W169) A 200 CDI (169.308, 169.008)			**2004-12**
OM 640.941	100	136	
-> 04.2012, After soot particulate filter			**68050**
Engine 30757509 ->, Before turbocharger, 04.2011 ->			**68051**
-> 04.2012, Euro 5, Before catalytic converter, Without soot filter			**68053**
Before soot particulate filter, 597,3 mm., Black			**68054**
Clase A (W176) A 180 CDI (176.000)			**2012-14**
OM 651.901	80	109	
Engine OM 651.901			**68012**
Exhaust turbocharger, 257,3 mm.			**68031**
Before soot particulate filter			**68041**
Clase A (W176) A 200 CDI (176.001)			**2012-14**
OM 651.901	100	136	
Exhaust turbocharger, 257,3 mm.			**68031**
Before soot particulate filter			**68041**
Clase A (W176) A 200 CDI / d (176.008)			**2014-18**
OM 651.930	100	136	
Exhaust turbocharger, 257,3 mm.			**68031**
For catalytic converter, Before soot particulate filter			**68041**
Clase A (W176) A 200 CDI / d 4-matic (176.002)			**2014-18**
OM 651.930	100	136	
Exhaust turbocharger, 257,3 mm.			**68031**
Before soot particulate filter, For catalytic converter			**68041**
Clase A (W176) A 220 CDI (176.003)			**2014-18**
OM 651.930	120	163	
Exhaust turbocharger, 257,3 mm.			**68031**
Clase A (W176) A 220 CDI (176.003)			**2012-18**
OM 651.930	125	170	
PTC, 397,3 mm., Black			**68012**
Exhaust turbocharger, 257,3 mm.			**68031**
Before soot particulate filter, For OE 9058501			**68041**
Clase A (W176) A 220 CDI 4-matic (176.005)			**2014-18**
OM 651.930	125	170	
Exhaust turbocharger, 257,3 mm.			**68031**
Before soot particulate filter			**68041**
Clase A (W176) A 220 d (176.003)			**2015-18**
OM 651.930	130	177	
Exhaust turbocharger, 257,3 mm.			**68031**
For catalytic converter			**68041**
Clase A (W176) A 220 d 4-matic (176.005)			**2015-18**
OM 651.930	130	177	
Exhaust turbocharger, 257,3 mm.			**68031**
For catalytic converter			**68041**
Clase B Sports Tourer (W245) B 180 CDI (245.207)			**2005-11**
OM 640.940	80	109	
-> 05.2011, After catalytic converter, After soot particulate filter			**68050**
Before turbocharger			**68051**
Before turbocharger, Ch. A 107854 ->			**68052**
-> 05.2011, Euro 5, Before catalytic converter, Without soot filter			**68053**
Before soot particulate filter, 597,3 mm., Black			**68054**

MERCEDES-BENZ Cont.

Clase B Sports Tourer (W245) B 200 CDI (245.208)		**2005-11**
OM 640.941	103	140
04.2005 - 05.2011, After catalytic converter, After soot particulate filter		**68050**
Before turbocharger		**68051**
Before turbocharger, Ch. A 107854 ->		**68052**
04.2005 - 05.2011, Euro 5, Before catalytic converter, Without soot filter		**68053**
Before soot particulate filter, 597,3 mm., Black		**68054**
Clase B Sports Tourer (W245) B 200 CDI (245.208)		**2005-11**
OM 640.941	100	136
04.2005 - 05.2011, After catalytic converter, After soot particulate filter		**68050**
Engine 30757509 ->, Before turbocharger, 04.2011 ->		**68051**
04.2005 - 05.2011, Euro 5, Before catalytic converter, Without soot filter		**68053**
Before soot particulate filter, 597,3 mm., Black		**68054**
Clase B Sports Tourer (W246, W242) B 160 CDI / d (246.211)		**2013-18**
OM 607.951 (K9K)	66	90
PTC, 397,3 mm., Black		**68012**
Before catalytic converter		**68041**
Clase B Sports Tourer (W246, W242) B 180 CDI (246.200)		**2011-14**
OM 651.901	80	109
Exhaust turbocharger, 257,3 mm.		**68031**
Clase B Sports Tourer (W246, W242) B 180 CDI / d (246.212)		**2013-18**
OM 607.951 (K9K)	80	109
PTC, 397,3 mm., Black		**68012**
Before catalytic converter		**68041**
Clase B Sports Tourer (W246, W242) B 200 CDI (246.201)		**2011-14**
OM 651.901	100	136
Exhaust turbocharger, 257,3 mm.		**68031**
Clase B Sports Tourer (W246, W242) B 200 CDI / d (246.208)		**2014-18**
OM 651.930	100	136
Exhaust turbocharger, 257,3 mm.		**68031**
Before catalytic converter		**68041**
Clase B Sports Tourer (W246, W242) B 200 CDI / d 4-matic (246.202)		**2014-18**
OM 651.930	100	136
Exhaust turbocharger, 257,3 mm.		**68031**
Before catalytic converter		**68041**
Clase B Sports Tourer (W246, W242) B 220 CDI / d (246.203)		**2013-18**
OM 651.930	120	163
Exhaust turbocharger, 257,3 mm.		**68031**
Clase B Sports Tourer (W246, W242) B 220 CDI / d (246.203)		**2014-18**
OM 651.930	130	177
Exhaust turbocharger, 257,3 mm.		**68031**
Before catalytic converter		**68041**
Clase B Sports Tourer (W246, W242) B 220 CDI / d (246.203)		**2011-18**
OM 651.930	125	170
02.2014 ->, Exhaust turbocharger		**68031**
Clase B Sports Tourer (W246, W242) B 220 CDI / d 4-matic (246.205)		**2014-18**
OM 651.930	130	177
Exhaust turbocharger, 257,3 mm.		**68031**
Before catalytic converter		**68041**
Clase C (W203) C 200 CDI (203.007)		**2003-07**
OM 646.962, OM 646.963	90	122
With factory fitted soot -/particulate filter, Euro 4, Exhaust Manifold		**68023**
Engine OM 646.962, Before soot particulate filter, R.H.D.		**68029**
-> 06.2007, Particulate Filter, L.H.D.		**68039**
Clase C (W203) C 220 CDI (203.006)		**2000-07**
OM 611.962	100	136
Before soot particulate filter, R.H.D.		**68029**
Clase C (W203) C 220 CDI (203.008)		**2003-07**
OM 646.963	110	150
Before soot particulate filter, R.H.D.		**68029**
Engine OM 646.963, -> 06.2007, Particulate Filter, L.H.D.		**68039**
Clase C (W204) C 180 CDI (204.000)		**2010-14**
OM 651.913	88	120
PTC, 397,3 mm., Black		**68012**
Before turbocharger, 327,3 mm.		**68027**
-> Ch. A 637722, Before particulate filter		**68043**
-> Ch. F 747897, Before particulate filter		**68043**
Clase C (W204) C 200 CDI (204.001)		**2009-14**
OM 651.913	100	136
After catalytic converter		**68012**
Before turbocharger, 327,3 mm.		**68027**
Ch. V001051 ->, Before particulate filter		**68043**
Clase C (W204) C 200 CDI (204.007, 204.006)		**2007-09**
OM 646.811, OM 646.812	100	136
PTC, 597,3 mm., Black		**68018**
Before soot particulate filter		**68022**
Clase C (W204) C 220 CDI (204.002)		**2008-14**
OM 651.911	125	170
PTC, 397,3 mm., Black		**68012**
Before turbocharger, 327,3 mm.		**68027**
Ch. L 025327 ->, Before particulate filter		**68043**
Ch. V 001051 ->, Before particulate filter		**68043**

FAE

MERCEDES-BENZ Cont.

Clase C (W204) C 220 CDI (204.008)		**2007-08**
OM 646.811	125	170
PTC, 597,3 mm., Black		**68018**
For soot particulate filter		**68022**
Before turbocharger, 327,3 mm.		**68027**
Clase C (W204) C 220 CDI (204.008)		**2007-08**
OM 646.811	120	163
For soot particulate filter		**68022**
Before turbocharger, 327,3 mm.		**68027**
Clase C (W204) C 220 CDI 4-matic (204.084)		**2013-14**
OM 651.912	125	170
After catalytic converter, For OE A 008 153 27 28		**68012**
Before turbocharger, 327,3 mm.		**68027**
Clase C (W204) C 250 CDI (204.003)		**2008-14**
OM 651.911	150	204
After catalytic converter		**68012**
Before turbocharger, 327,3 mm.		**68027**
Ch. L 025327 ->, Before particulate filter		**68043**
Ch. V 001051 ->, Before particulate filter		**68043**
Clase C (W204) C 250 CDI 4-matic (204.082)		**2011-14**
OM 651.912	150	204
After catalytic converter		**68012**
Before turbocharger, 327,3 mm.		**68027**
Clase C (W204) C 300 (204.055)		**2011-14**
M 276.957	185	252
Before catalytic converter		**68094**
Clase C (W204) C 300 4-matic (204.080)		**2011-14**
M 276.957	185	252
Before catalytic converter		**68094**
Clase C (W204) C 300 CDI 4-matic (204.092)		**2011-14**
OM 642.832	170	231
Engine OM 642.832, For catalytic converter		**68040**
Before soot particulate filter		**68094**
Clase C (W204) C 320 CDI (204.022)		**2007-14**
OM 642.960	165	224
Exhaust turbocharger, 257,3 mm.		**68031**
For catalytic converter		**68040**
Before soot particulate filter		**68094**
Clase C (W204) C 320 CDI 4-matic (204.089)		**2007-14**
OM 642.961	165	224
Exhaust turbocharger, 257,3 mm.		**68031**
Before soot particulate filter		**68094**
Clase C (W204) C 350 (204.057)		**2011-14**
M 276.957	225	306
Before catalytic converter		**68094**
Clase C (W204) C 350 4-matic (204.088)		**2011-14**
M 276.957	225	306
Before catalytic converter		**68094**
Clase C (W204) C 350 CDI (204.022)		**2009-14**
OM 642.960	165	224
For catalytic converter		**68040**
Engine OM 642.960, Before soot particulate filter		**68094**
Clase C (W204) C 350 CDI (204.023)		**2011-14**
OM 642.834	195	265
Exhaust turbocharger, 257,3 mm.		**68031**
For catalytic converter		**68040**
Before soot particulate filter		**68094**
Clase C (W204) C 350 CDI (204.025)		**2009-14**
OM 642.830	170	231
For catalytic converter		**68040**
Before soot particulate filter		**68094**
Clase C (W204) C 350 CDI 4-matic (204.089)		**2009-14**
OM 642.961	165	224
Engine OM 642.961, Before soot particulate filter		**68094**
Clase C (W204) C 350 CDI 4-matic (204.092)		**2009-14**
OM 642.832	170	231
For catalytic converter		**68040**
Before soot particulate filter		**68094**
Clase C (W204) C 350 CGI (204.065)		**2008-14**
M 272.982	215	292
Before catalytic converter		**68094**
Clase C (W205) C 200 d (205.007)		**2015-18**
OM 651.921	100	136
Before catalytic converter		**68034**
Engine OM 651.921, Catalytic Converter, L.H.D., With SCR system		**68060**
Clase C (W205) C 220 BlueTEC / d (205.002, 205.004)		**2014-18**
OM 651.921	125	170
After catalytic converter, For OE A 008 153 27 28		**68012**
Before turbocharger, 327,3 mm.		**68027**
Before catalytic converter		**68034**
Engine OM 651.921, Catalytic Converter, L.H.D., With SCR system		**68060**

MERCEDES-BENZ Cont.

Clase C (W205) C 220 BlueTEC / d (205.003)			**2014-16**
OM 651.921	120	163	
After catalytic converter, For OE A 008 153 27 28			**68012**
Before turbocharger, 327,3 mm.			**68027**
Before catalytic converter			**68034**
Engine OM 651.921, Catalytic Converter, L.H.D., With SCR system			**68060**
Clase C (W205) C 220 d 4-matic (205.005)			**2015-18**
OM 651.921	125	170	
PTC, 336 mm.			**68034**
Clase C (W205) C 250 BlueTEC / d (205.008, 205.006)			**2014-18**
OM 651.921	150	204	
After catalytic converter, For OE A 008 153 27 28			**68012**
Before turbocharger, 327,3 mm.			**68027**
Before catalytic converter			**68034**
Engine OM 651.921, Catalytic Converter, L.H.D./R.H.D., With SCR system			**68060**
Clase C (W205) C 250 BlueTEC / d 4-matic (205.009)			**2014-18**
OM 651.921	150	204	
Before turbocharger, 327,3 mm.			**68027**
Before catalytic converter			**68034**
Clase C (W205) C 300 BlueTEC Hybrid / h (205.012)			**2014-18**
OM 651.921	150	204	
Before turbocharger, 327,3 mm.			**68027**
Before catalytic converter			**68034**
Engine OM 651.921, Catalytic Converter, L.H.D., With SCR system			**68060**
Clase C Cabriolet (A205) C 220 d (205.404)			**2016-18**
OM 651.921	125	170	
Before catalytic converter			**68034**
Engine OM 651.921, Catalytic Converter, L.H.D., With SCR system			**68060**
Clase C Cabriolet (A205) C 220 d (205.404)			**2016-18**
OM 651.921	120	163	
Before catalytic converter			**68034**
Clase C Cabriolet (A205) C 220 d 4-matic (205.405)			**2016-18**
OM 651.921	125	170	
Before catalytic converter			**68034**
Clase C Cabriolet (A205) C 250 d (205.408)			**2016-18**
OM 651.921	150	204	
Before catalytic converter			**68034**
Engine OM 651.921, Catalytic Converter, L.H.D., With SCR system			**68060**
Clase C Coupe (C204) C 220 CDI (204.302)			**2011 ->**
OM 651.911	120	163	
Before turbocharger, 327,3 mm.			**68027**
Before soot particulate filter, 197,3 mm.			**68043**
Clase C Coupe (C204) C 220 CDI (204.302)			**2011 ->**
OM 651.911	125	170	
Before turbocharger, 327,3 mm.			**68027**
Before soot particulate filter, 197,3 mm.			**68043**
Clase C Coupe (C204) C 250 CDI (204.303)			**2011 ->**
OM 651.911	150	204	
Before turbocharger, 327,3 mm.			**68027**
Before soot particulate filter, 197,3 mm.			**68043**
Clase C Coupe (C204) C 350 (204.357)			**2011 ->**
M 276.957	225	306	
Before catalytic converter			**68094**
Clase C Coupe (C204) C 350 4-matic (204.388)			**2013 ->**
M 276.957	225	306	
After catalytic converter			**68094**
Clase C Coupe (C205) C 220 d (205.304)			**2015-18**
OM 651.921	125	170	
Before catalytic converter			**68034**
Engine OM 651.921, Catalytic Converter, L.H.D., With SCR system			**68060**
Clase C Coupe (C205) C 220 d (205.304)			**2015-18**
OM 651.921	120	163	
Before catalytic converter			**68034**
Clase C Coupe (C205) C 220 d 4-matic (205.305)			**2016-18**
OM 651.921	125	170	
Before catalytic converter			**68034**
Clase C Coupe (C205) C 250 d (205.308)			**2015-18**
OM 651.921	150	204	
Before catalytic converter			**68034**
Engine OM 651.921, Catalytic Converter, L.H.D., With SCR system			**68060**
Clase C Coupe (C205) C 250 d 4-matic (205.309)			**2016-18**
OM 651.921	150	204	
Before catalytic converter			**68034**
Clase C Coupe (CL203) C 200 CDI (203.707)			**2003-08**
OM 646.962	90	122	
With factory fitted soot -/particulate filter, Euro 4, Exhaust Manifold			**68023**
Before soot particulate filter, R.H.D.			**68029**
Engine OM 646.962, OE A 0051531128, OE A 0071536328, Particulate Filter			**68039**
Clase C Coupe (CL203) C 220 CDI			**2001-04**
OM 611.962	100	136	
Before soot particulate filter, R.H.D.			**68029**

FAE

MERCEDES-BENZ Cont.

Clase C Coupe (CL203) C 220 CDI (203.708)			**2004-08**
OM 646.963	110	150	
Before soot particulate filter, R.H.D.			**68029**
Engine OM 646.963, OE A 0071536328, OE A 0051531128, Particulate Filter			**68039**
Clase C T-Model (S203) C 200 CDI (203.204, 203.207)			**2001-07**
OM 611.962	75	102	
With factory fitted soot -/particulate filter, Euro 4, Exhaust Manifold			**68023**
Before soot particulate filter, R.H.D.			**68029**
Engine OM 611.962, -> 06.2007, Particulate Filter, L.H.D.			**68039**
Clase C T-Model (S203) C 200 CDI (203.207)			**2003-07**
OM 646.962, OM 646.963	90	122	
With factory fitted soot -/particulate filter, Euro 4, Exhaust Manifold			**68023**
Engine OM 646.962, Before soot particulate filter, R.H.D.			**68029**
-> 06.2007, Particulate Filter, L.H.D.			**68039**
Clase C T-Model (S203) C 220 CDI (203.208)			**2004-07**
OM 646.963	110	150	
Before soot particulate filter, R.H.D.			**68029**
Engine OM 646.963, -> 06.2007, Particulate Filter, L.H.D.			**68039**
Clase C T-Model (S203) C 220 CDI (203.208)			**2006-07**
OM 646.963	100	136	
Before soot particulate filter, R.H.D.			**68029**
Engine OM 646.963, -> 06.2007, Particulate Filter, L.H.D.			**68039**
Clase C T-Model (S204) C 180 CDI (204.200)			**2011-14**
OM 651.913	88	120	
PTC, 397,3 mm., Black			**68012**
Before turbocharger, 327,3 mm.			**68027**
Before soot particulate filter, 197,3 mm.			**68043**
Clase C T-Model (S204) C 200 CDI (204.201)			**2010-14**
OM 651.913	100	136	
After catalytic converter, For OE A 008 153 27 28			**68012**
Before turbocharger, 327,3 mm.			**68027**
Before soot particulate filter, 197,3 mm.			**68043**
Clase C T-Model (S204) C 200 CDI (204.207)			**2007-09**
OM 646.811	100	136	
PTC, 597,3 mm., Black			**68018**
Before soot particulate filter			**68022**
Clase C T-Model (S204) C 220 CDI (204.202)			**2008-14**
OM 651.911	125	170	
After catalytic converter, For OE A 008 153 27 28			**68012**
Before turbocharger, 327,3 mm.			**68027**
Before soot particulate filter, 197,3 mm.			**68043**
Clase C T-Model (S204) C 220 CDI (204.208)			**2007-08**
OM 646.811	125	170	
PTC, 597,3 mm., Black			**68018**
Before soot particulate filter			**68022**
Before turbocharger, 327,3 mm.			**68027**
Clase C T-Model (S204) C 220 CDI (204.208)			**2007-08**
OM 646.811	120	163	
For soot particulate filter			**68022**
Before turbocharger, 327,3 mm.			**68027**
Clase C T-Model (S204) C 220 CDI 4-matic (204.284)			**2013-14**
OM 651.912	125	170	
After catalytic converter, For OE A 008 153 27 28			**68012**
Before turbocharger, 327,3 mm.			**68027**
Clase C T-Model (S204) C 250 CDI (204.203)			**2009-14**
OM 651.911	150	204	
After catalytic converter, For OE A 008 153 27 28			**68012**
Before turbocharger, 327,3 mm.			**68027**
Before soot particulate filter, 197,3 mm.			**68043**
Clase C T-Model (S204) C 250 CDI 4-matic (204.282)			**2010-14**
OM 651.912	150	204	
After catalytic converter, For OE A 008 153 27 28			**68012**
Before turbocharger, 327,3 mm.			**68027**
Clase C T-Model (S204) C 250 CGI (204.247)			**2009-14**
M 271.860	150	204	
PTC, 1101 mm., Black			**68022**
Clase C T-Model (S204) C 300 CDI 4-matic (204.292)			**2011-14**
OM 642.832	170	231	
Before soot particulate filter			**68094**
Clase C T-Model (S204) C 320 CDI (204.222)			**2007-14**
OM 642.960	165	224	
Exhaust turbocharger, 257,3 mm.			**68031**
For catalytic converter			**68040**
Before soot particulate filter			**68094**
Clase C T-Model (S204) C 320 CDI 4-matic (204.289)			**2007-11**
OM 642.961	165	224	
-> 06.2009, Exhaust turbocharger			**68031**
For catalytic converter			**68040**
Before soot particulate filter			**68094**
Clase C T-Model (S204) C 350 CDI (204.223)			**2011-14**
OM 642.834	195	265	
07.2012 ->, Exhaust turbocharger			**68031**
For catalytic converter			**68040**
Before soot particulate filter			**68094**

MERCEDES-BENZ Cont.

Clase C T-Model (S204) C 350 CDI (204.225)			**2009-14**
OM 642.830	170	231	
For catalytic converter			**68040**
Before soot particulate filter			**68094**
Clase C T-Model (S204) C 350 CDI (204.225)			**2007-14**
OM 642.830	165	224	
Before soot particulate filter			**68094**
Clase C T-Model (S204) C 350 CDI 4-matic (204.289)			**2007-11**
OM 642.961	165	224	
Engine OM 642.961, Before soot particulate filter			**68094**
Clase C T-Model (S204) C 350 CDI 4-matic (204.292)			**2009-14**
OM 642.832	170	231	
For catalytic converter			**68040**
Before soot particulate filter			**68094**
Clase C T-Model (S204) C 350 CGI (204.257)			**2011-14**
M 276.957	225	306	
Before catalytic converter			**68094**
Clase C T-Model (S205) C 200 d (205.207)			**2015-18**
OM 651.921	100	136	
Before catalytic converter			**68034**
Engine OM 651.921, Catalytic Converter, L.H.D., With SCR system			**68060**
Clase C T-Model (S205) C 220 BlueTEC / d (205.204)			**2014-18**
OM 651.921	125	170	
Before turbocharger, 327,3 mm.			**68027**
Before catalytic converter			**68034**
Engine OM 651.921, Catalytic Converter, L.H.D., With SCR system			**68060**
Clase C T-Model (S205) C 220 BlueTEC / d (205.204)			**2014-18**
OM 651.921	120	163	
Before turbocharger, 327,3 mm.			**68027**
Before catalytic converter			**68034**
Clase C T-Model (S205) C 220 d 4-matic (205.205)			**2015-18**
OM 651.921	125	170	
Before catalytic converter			**68034**
Clase C T-Model (S205) C 250 BlueTEC / d (205.208)			**2014-18**
OM 651.921	150	204	
Before turbocharger, 327,3 mm.			**68027**
Before catalytic converter			**68034**
Engine OM 651.921, Catalytic Converter, L.H.D., With SCR system			**68060**
Clase C T-Model (S205) C 250 BlueTEC / d 4-matic (205.209)			**2014-18**
OM 651.921	150	204	
Before turbocharger, 327,3 mm.			**68027**
Before catalytic converter			**68034**
Clase C T-Model (S205) C 300 BlueTEC Hybrid / h (205.212)			**2014-18**
OM 651.921	150	204	
Before turbocharger, 327,3 mm.			**68027**
Before catalytic converter			**68034**
Engine OM 651.921, Catalytic Converter, L.H.D., With SCR system			**68060**
Clase CLC (CI203) CLC 200 CDI (203.707)			**2008-11**
OM 646.962	90	122	
With factory fitted soot -/particulate filter, Euro 4, Exhaust Manifold			**68023**
Before soot particulate filter, R.H.D.			**68029**
Engine OM 646.962, OE A 0071536328, OE A 0051531128, Particulate Filter			**68039**
Clase CLC (CL203) CLC 220 CDI (203.708)			**2008-11**
OM 646.963	100	136	
Engine OM 646.963, OE A 0071536328, OE A 0051531128, Particulate Filter			**68039**
Clase CLC (CI203) CLC 220 CDI (203.708)			**2008-11**
OM 646.963	110	150	
Before soot particulate filter, R.H.D.			**68029**
Engine OM 646.963, OE A 0071536328, OE A 0051531128, Particulate Filter			**68039**
Clase E (W211) E 200 CDI (211.004)			**2002-08**
OM 646.951	75	102	
Engine OM 646.951, For soot particulate filter, R.H.D.			**68015**
PTC, 597,3 mm., Black			**68018**
With factory fitted soot -/particulate filter, Euro 4, Exhaust Manifold			**68023**
OM 646.961, ->Model 2006, After catalytic converter, L.H.D., With diesel soot filter			**68039**
Clase E (W211) E 200 CDI (211.004)			**2002-08**
OM 646.951	90	122	
Engine OM 646.951, For soot particulate filter, R.H.D.			**68015**
PTC, 597,3 mm., Black			**68018**
With factory fitted soot -/particulate filter, Euro 4, Exhaust Manifold			**68023**
OM 646.951, ->Model 2006, After catalytic converter, L.H.D., With diesel soot filter			**68039**
Clase E (W211) E 200 CDI (211.007)			**2006-08**
OM 646.820	100	136	
PTC, 597,3 mm., Black			**68018**
OM 646.820, ->Model 2006, After catalytic converter, L.H.D., With diesel soot filter			**68039**
Clase E (W211) E 220 CDI			**2003-08**
OM 646.821	120	163	
Engine OM 646.821, For soot particulate filter, R.H.D.			**68015**
Clase E (W211) E 220 CDI (211.006)			**2002-08**
OM 646.961	110	150	
Engine OM 646.961, For soot particulate filter, R.H.D.			**68015**
PTC, 597,3 mm., Black			**68018**
With factory fitted soot -/particulate filter, Exhaust Manifold, 427,3 mm.			**68023**
OM 646.961, ->Model 2006, After catalytic converter, L.H.D., With diesel soot filter			**68039**

FAE

MERCEDES-BENZ Cont.

Clase E (W211) E 220 CDI (211.006)			**2002-08**
OM 646.961	100	136	
For soot particulate filter, R.H.D.			**68015**
PTC, 597,3 mm., Black			**68018**
With factory fitted soot -/particulate filter, Euro 4, Exhaust Manifold			**68023**
OM 646.961, ->Model 2006, After catalytic converter, L.H.D., With diesel soot filter			**68039**
Clase E (W211) E 220 CDI (211.008)			**2006-08**
OM 646.821	125	170	
For soot particulate filter, R.H.D.			**68015**
PTC, 597,3 mm., Black			**68018**
OM 646.821, ->Model 2006, After catalytic converter, L.H.D., With diesel soot filter			**68039**
Clase E (W211) E 280 CDI (211.020)			**2005-08**
OM 642.920	140	190	
Exhaust turbocharger, 257,3 mm.			**68031**
Engine OM 642.920, Catalytic Converter, L.H.D., Without diesel soot filter			**68039**
Before soot particulate filter			**68094**
Clase E (W211) E 280 CDI (211.023)			**2004-08**
OM 648.961	130	177	
Engine OM 646.961, For soot particulate filter, R.H.D.			**68015**
Clase E (W211) E 280 CDI 4-matic (211.084)			**2005-08**
OM 642.921	140	190	
Exhaust turbocharger, 257,3 mm.			**68031**
OM 642.921, -> 06.2008, Catalytic Converter, L.H.D., With diesel soot filter			**68039**
OM 642.921, 08.2008 ->, Catalytic Converter, L.H.D., With diesel soot filter			**68060**
Clase E (W211) E 300 BlueTEC (211.024)			**2007-08**
OM 642.920	155	211	
Exhaust turbocharger, 257,3 mm.			**68031**
Engine OM 642.920, Catalytic Converter, L.H.D., Without diesel soot filter			**68039**
Before soot particulate filter			**68094**
Clase E (W211) E 320 CDI (211.022)			**2005-08**
OM 642.920	165	224	
Exhaust turbocharger, 257,3 mm.			**68031**
Engine OM 642.920, Catalytic Converter, L.H.D., Without diesel soot filter			**68039**
Before soot particulate filter			**68094**
Clase E (W211) E 320 CDI (211.026)			**2002-08**
OM 648.961	150	204	
Engine OM 646.961, For soot particulate filter, R.H.D.			**68015**
Clase E (W211) E 320 CDI 4-matic (211.089)			**2005-08**
OM 642.910, OM 642.921	165	224	
OM 642.921, -> 06.2008, Catalytic Converter, L.H.D., With diesel soot filter			**68039**
OM 642.921, 06.2008 ->, Catalytic Converter, L.H.D., With diesel soot filter			**68060**
Clase E (W211) E 350 CGI (211.057)			**2007-08**
M 272.985	215	292	
From catalytic converter to front muffler, -> Ch. B 400000			**68012**
Clase E (W211) E 420 CDI (211.029)			**2006-08**
OM 629.910	231	314	
PTC, 597,3 mm., Black			**68018**
Clase E (W212) E 200 CDI / BlueTEC (212.005, 212.006)			**2009-15**
OM 651.925	100	136	
After catalytic converter, 212.005, For OE A 008 153 27 28			**68012**
Before turbocharger, 327,3 mm.			**68027**
Before catalytic converter, R.H.D.			**68029**
Before catalytic converter			**68034**
After soot particulate filter, For OE 9058501			**68041**
Ch. V000001 ->, Before particulate filter			**68043**
Ch. L000001 ->, Before particulate filter			**68043**
Clase E (W212) E 220 BlueTEC (212.001)			**2014-15**
OM 651.924	130	177	
After catalytic converter, For OE A 008 153 27 28			**68012**
Before turbocharger, 327,3 mm.			**68027**
Before catalytic converter, R.H.D.			**68029**
Before catalytic converter			**68034**
Before soot particulate filter, 197,3 mm.			**68043**
Clase E (W212) E 220 CDI			**2009-15**
OM 651.924	120	163	
Before soot particulate filter, 212.002, Ch. A 022513 ->			**68012**
Before catalytic converter			**68034**
Clase E (W212) E 220 CDI / BlueTEC (212.001, 212.002)			**2009-16**
OM 651.924	125	170	
After catalytic converter, For OE A 008 153 27 28			**68012**
Before turbocharger, 327,3 mm.			**68027**
Before catalytic converter, R.H.D.			**68029**
Before catalytic converter			**68034**
After soot particulate filter, For OE 9058501			**68041**
Before soot particulate filter, 197,3 mm.			**68043**
Clase E (W212) E 250 CDI / BlueTEC (212.003, 212.004)			**2009-16**
OM 651.924	150	204	
After catalytic converter, For OE A 008 153 27 28			**68012**
Before turbocharger, 327,3 mm.			**68027**
Before catalytic converter, R.H.D.			**68029**
Exhaust turbocharger, 257,3 mm.			**68031**
Before catalytic converter			**68034**
After soot particulate filter, For OE 9058501			**68041**
Before soot particulate filter, 197,3 mm.			**68043**

MERCEDES-BENZ Cont.

Clase E (W212) E 250 CDI / BlueTEC 4-matic (212.082, 212.097)			**2011-15**
OM 651.924	150	204	
After catalytic converter, For OE A 008 153 27 28			**68012**
Before turbocharger, 327,3 mm.			**68027**
After soot particulate filter			**68041**
Clase E (W212) E 300 (212.055)			**2011-15**
M 276.952	185	252	
Before catalytic converter			**68094**
Clase E (W212) E 300 4-matic (212.080)			**2011-15**
M 276.952	185	252	
Before catalytic converter			**68094**
Clase E (W212) E 300 CDI (212.020)			**2009-10**
OM 642.850	150	204	
Before catalytic converter			**68012**
-> Ch. B234558, Before soot particulate filter			**68040**
After soot particulate filter, For OE 9058501			**68041**
Clase E (W212) E 300 CDI / BlueTEC (212.020, 212.021, 212.027)			**2011-15**
OM 642.850, OM 642.852	170	231	
Before catalytic converter, 212.020			**68012**
Engine OM 642.852 Exhaust turbocharger			**68031**
-> 06.2015, -> Ch. B234558, Before soot particulate filter			**68040**
After soot particulate filter			**68041**
Engine OM 642.852, After soot particulate filter, -> 12.2013			**68094**
Clase E (W212) E 300 Hybrid / BlueTEC Hybrid (212.098)			**2011-16**
OM 651.924	150	204	
After catalytic converter, For OE A 008 153 27 28			**68012**
Before catalytic converter			**68029**
PTC, 336 mm.			**68034**
Before soot particulate filter, 197,3 mm.			**68043**
Clase E (W212) E 350 (212.059)			**2011-15**
M 276.952	225	306	
Before catalytic converter			**68094**
Clase E (W212) E 350 4-matic (212.088)			**2011-15**
M 276.952	225	306	
Before catalytic converter			**68094**
Clase E (W212) E 350 BlueTEC			**2013-15**
OM 642.852	185	252	
After soot particulate filter, Model 2013			**68094**
Clase E (W212) E 350 BlueTEC (212.024)			**2009-15**
OM 642.850	155	211	
Before catalytic converter			**68012**
-> 06.2015, Before soot particulate filter			**68040**
After soot particulate filter, For OE 9058501			**68041**
After soot particulate filter, Model 2010, 2011, 2012, 2013			**68094**
Clase E (W212) E 350 BlueTEC (212.026)			**2014-15**
OM 642.852	190	258	
Exhaust turbocharger, 257,3 mm.			**68031**
Engine OM 642.852, ->06.2015, ->Ch.B234558, Before soot particulate filter			**68040**
Clase E (W212) E 350 BlueTEC 4-matic (212.094)			**2014-15**
OM 642.858	190	258	
-> 06.2015, -> Ch. B234558, Before soot particulate filter			**68040**
Clase E (W212) E 350 BlueTEC 4-matic (212.094)			**2013-15**
OM 642.858	185	252	
Exhaust turbocharger, 257,3 mm.			**68031**
-> 06.2015, -> Ch. B234558, Before soot particulate filter			**68040**
After soot particulate filter, Model 2013			**68094**
Clase E (W212) E 350 CDI (212.023)			**2011-15**
OM 642.852	195	265	
Exhaust turbocharger, 257,3 mm.			**68031**
-> 06.2015, -> Ch. B234558, Before soot particulate filter			**68040**
After soot particulate filter			**68041**
Clase E (W212) E 350 CDI (212.025)			**2009-15**
OM 642.850	170	231	
Before catalytic converter			**68012**
-> 06.2015, Before soot particulate filter			**68040**
After soot particulate filter, For OE 9058501			**68041**
Clase E (W212) E 350 CDI 4-matic (212.089)			**2009-11**
OM 642.856	170	231	
Before catalytic converter			**68012**
Exhaust turbocharger, 257,3 mm.			**68031**
-> Ch. B234558, Before soot particulate filter			**68040**
After soot particulate filter, For OE 9058501			**68041**
Clase E (W212) E 350 CDI 4-matic (212.093)			**2011-15**
OM 642.858	195	265	
Exhaust turbocharger, 257,3 mm.			**68031**
-> 06.2015, -> Ch. B234558, Before soot particulate filter			**68040**
After soot particulate filter			**68041**
Clase E (W212) E 350 CGI (212.057)			**2009-11**
M 272.982, M 272.983	215	292	
Before catalytic converter			**68094**

FAE

MERCEDES-BENZ Cont.

Clase E Cabriolet (A207) E 220 BlueTEC (207.401)			**2014-16**
OM 651.911	130	177	
Before soot particulate filter, For OE A 008 153 27 28			**68012**
Before turbocharger, 327,3 mm.			**68027**
-> 07.2022, R.H.D.			**68029**
Before soot particulate filter			**68034**
-> Model 2014, Before soot particulate filter, L.H.D.			**68040**
Before soot particulate filter, 197,3 mm.			**68043**
Clase E Cabriolet (A207) E 220 CDI (207.402)			**2010-16**
OM 651.911	120	163	
Before soot particulate filter, For OE A 008 153 27 28			**68012**
Before turbocharger, 327,3 mm.			**68027**
-> 06.2015, R.H.D.			**68029**
Before catalytic converter			**68034**
-> Model 2014, Before soot particulate filter, L.H.D.			**68040**
Before soot particulate filter, 197,3 mm.			**68043**
Clase E Cabriolet (A207) E 220 CDI / BlueTEC / d (207.402, 207.401)			**2010-16**
OM 651.911	125	170	
Before soot particulate filter, For OE A 008 153 27 28			**68012**
Before turbocharger, 327,3 mm.			**68027**
-> 06.2015, R.H.D.			**68029**
Exhaust turbocharger, 257,3 mm.			**68031**
PTC, 336 mm.			**68034**
-> Model 2014, Before soot particulate filter, L.H.D.			**68040**
After soot particulate filter			**68041**
Before soot particulate filter, 197,3 mm.			**68043**
Clase E Cabriolet (A207) E 250 CDI / BlueTEC / d (207.403, 207.404)			**2010-16**
OM 651.911	150	204	
Before soot particulate filter, For OE A 008 153 27 28			**68012**
Before turbocharger, 327,3 mm.			**68027**
-> 06.2015, R.H.D.			**68029**
Exhaust turbocharger, 257,3 mm.			**68031**
Before soot particulate filter			**68034**
-> Model 2014, Before soot particulate filter, L.H.D.			**68040**
After soot particulate filter			**68041**
Before soot particulate filter, 197,3 mm.			**68043**
Clase E Cabriolet (A207) E 300 (207.455)			**2011-16**
M 276.957	185	252	
Before catalytic converter			**68094**
Clase E Cabriolet (A207) E 350 (207.459)			**2011-14**
M 276.957	225	306	
Before catalytic converter			**68094**
Clase E Cabriolet (A207) E 350 BlueTEC (207.426)			**2013-16**
OM 642.838	185	252	
Exhaust turbocharger, 257,3 mm.			**68031**
-> 06.2015, Before soot particulate filter			**68040**
After soot particulate filter, Model 2013			**68094**
Clase E Cabriolet (A207) E 350 BlueTEC/ d (207.426)			**2014-16**
OM 642.838	190	258	
Exhaust turbocharger, 257,3 mm.			**68031**
-> 06.2015, Before soot particulate filter			**68040**
Clase E Cabriolet (A207) E 350 CDI (207.422)			**2010-11**
OM 642.836	170	231	
Before soot particulate filter			**68040**
Clase E Cabriolet (A207) E 350 CDI (207.423)			**2011-13**
OM 642.838	195	265	
Exhaust turbocharger, 257,3 mm.			**68031**
Before soot particulate filter			**68040**
After soot particulate filter			**68041**
Clase E Cabriolet (A207) E 350 CGI (207.457)			**2010-14**
M 272.982, M 272.984	215	292	
Before catalytic converter			**68094**
Clase E Cabriolet (A207) E 400 (207.465)			**2013-16**
M 276.820	245	333	
Before catalytic converter			**68094**
Clase E Chassis (VF211) E 220 CDI (211.606)			**2003-06**
OM 646.961	110	150	
With factory fitted soot -/particulate filter, Euro 4, Exhaust Manifold			**68023**
Clase E Coupe (C207) E 220 BlueTEC (207.301)			**2014-16**
OM 651.911	130	177	
Before soot particulate filter, For OE A 008 153 27 28			**68012**
Before turbocharger, 327,3 mm.			**68027**
-> 06.2015, R.H.D.			**68029**
Before soot particulate filter			**68034**
-> Model 2014, Before soot particulate filter, L.H.D.			**68040**
Before soot particulate filter, 197,3 mm.			**68043**
Clase E Coupe (C207) E 220 CDI (207.302)			**2010-14**
OM 651.911	120	163	
Before soot particulate filter, For OE A 008 153 27 28			**68012**
Before turbocharger, 327,3 mm.			**68027**
Before soot particulate filter			**68034**
-> Model 2014, Before soot particulate filter, L.H.D.			**68040**
After soot particulate filter			**68041**

MERCEDES-BENZ Cont.

Clase E Coupe (C207) E 220 CDI / d (207.302, 207.301)			**2010-16**
OM 651.911	125	170	
Before soot particulate filter, For OE A 008 153 27 28			**68012**
Before turbocharger, 327,3 mm.			**68027**
-> 06.2015, R.H.D.			**68029**
Exhaust turbocharger, 257,3 mm.			**68031**
Before soot particulate filter			**68034**
-> Model 2014, Before soot particulate filter, L.H.D.			**68040**
After soot particulate filter			**68041**
Before soot particulate filter, 197,3 mm.			**68043**
Clase E Coupe (C207) E 250 CDI / BlueTEC / d (207.303, 207.304)			**2009-16**
OM 651.911	150	204	
Before soot particulate filter, For OE A 008 153 27 28			**68012**
Before turbocharger, 327,3 mm.			**68027**
-> 06.2015, R.H.D.			**68029**
Before soot particulate filter			**68034**
-> Model 2014, Before soot particulate filter, L.H.D.			**68040**
After soot particulate filter, For OE 9058501			**68041**
Before soot particulate filter, 197,3 mm.			**68043**
Clase E Coupe (C207) E 300 (207.355)			**2011-16**
M 276.957	185	252	
Before catalytic converter			**68094**
Clase E Coupe (C207) E 350 (207.359)			**2011-14**
M 276.957	225	306	
Before catalytic converter			**68094**
Clase E Coupe (C207) E 350 BlueTEC (207.326)			**2013-16**
OM 642.838	185	252	
Exhaust turbocharger, 257,3 mm.			**68031**
-> 06.2015, Before soot particulate filter			**68040**
After soot particulate filter, Model 2013			**68094**
Clase E Coupe (C207) E 350 BlueTEC / d (207.326)			**2014-16**
OM 642.838	190	258	
Exhaust turbocharger, 257,3 mm.			**68031**
-> 06.2015, Before soot particulate filter			**68040**
Clase E Coupe (C207) E 350 CDI (207.322)			**2009-11**
OM 642.836	170	231	
Before soot particulate filter			**68040**
Clase E Coupe (C207) E 350 CDI (207.323)			**2011-13**
OM 642.838	195	265	
Exhaust turbocharger, 257,3 mm.			**68031**
Engine OM 642.838, Before soot particulate filter			**68040**
After soot particulate filter			**68041**
Before soot particulate filter			**68094**
Clase E Coupe (C207) E 350 CGI (207.357)			**2009-11**
M 272.982, M 272.984	215	292	
Before catalytic converter			**68094**
Clase E Coupe (C207) E 400 (207.365)			**2013-16**
M 276.820	245	333	
Before catalytic converter			**68094**
Clase E T-Model (S211) 350 CGI (211.257)			**2006-09**
M 272.985	215	292	
From catalytic converter to front muffler, -> Ch. B 400000			**68012**
Clase E T-Model (S211) E 200 CDI (211.207)			**2006-09**
OM 646.821	100	136	
PTC, 597,3 mm., Black			**68018**
Clase E T-Model (S211) E 220 CDI (211.206)			**2003-09**
OM 646.961	100	136	
For soot particulate filter, R.H.D.			**68015**
PTC, 597,3 mm., Black			**68018**
With factory fitted soot -/particulate filter, Euro 4, Exhaust Manifold			**68023**
OM 646.961, ->Model 2006, After catalytic converter, L.H.D., With diesel soot filter			**68039**
Clase E T-Model (S211) E 220 T CDI			**2003-09**
OM 646.821	120	163	
Engine OM 646.821, For soot particulate filter, R.H.D.			**68015**
Clase E T-Model (S211) E 220 T CDI (211.206)			**2003-09**
OM 646.961	110	150	
Engine OM 646.961, For soot particulate filter, R.H.D.			**68015**
PTC, 597,3 mm., Black			**68018**
With factory fitted soot -/particulate filter, Euro 4, Exhaust Manifold			**68023**
OM 646.961, ->Model 2006, After catalytic converter, L.H.D., With diesel soot filter			**68039**
Clase E T-Model (S211) E 220 T CDI (211.208)			**2006-09**
OM 646.821	125	170	
For soot particulate filter, R.H.D.			**68015**
PTC, 597,3 mm., Black			**68018**
Before turbocharger, 327,3 mm.			**68027**
OM 646.821, -> Model 2006, After catalytic converter, With diesel soot filter			**68039**
Clase E T-Model (S211) E 280 T CDI (211.220)			**2005-09**
OM 642.920	140	190	
Exhaust turbocharger, 257,3 mm.			**68031**
Engine OM 642.920, Catalytic Converter, L.H.D., Without diesel soot filter			**68039**
Before soot particulate filter			**68094**
Clase E T-Model (S211) E 280 T CDI (211.223)			**2004-09**
OM 648.961	130	177	
For soot particulate filter, R.H.D.			**68015**

FAE

MERCEDES-BENZ Cont.

Clase E T-Model (S211) E 280 T CDI 4-matic (211.284)			**2005-09**
OM 642.921	140	190	
Exhaust turbocharger, 257,3 mm.			**68031**
OM 642.921, -> 06.2008, Catalytic Converter, L.H.D., Without diesel soot filter			**68039**
OM 642.921, 06.2008 ->, Catalytic Converter, L.H.D., With diesel soot filter			**68060**
Clase E T-Model (S211) E 320 T CDI (211.222)			**2005-09**
OM 642.920	165	224	
Exhaust turbocharger, 257,3 mm.			**68031**
Engine OM 642.920, Catalytic Converter, L.H.D., Without diesel soot filter			**68039**
Before soot particulate filter			**68094**
Clase E T-Model (S211) E 320 T CDI (211.226)			**2003-09**
OM 648.961	150	204	
Engine OM 648.961, For soot particulate filter, R.H.D.			**68015**
Clase E T-Model (S211) E 320 T CDI 4-matic (211.289)			**2005-09**
OM 642.921	165	224	
Exhaust turbocharger, 257,3 mm.			**68031**
OM 642.921, -> 06.2008, Catalytic Converter, L.H.D., Without diesel soot filter			**68039**
OM 642.921, 06.2008 ->, Catalytic Converter, L.H.D., With diesel soot filter			**68060**
Clase E T-Model (S212) E 200 CDI / BlueTEC (212.205, 212.206)			**2009-16**
OM 651.925	100	136	
After catalytic converter, 212.205, For OE A 008 153 27 28			**68012**
Before turbocharger, 327,3 mm.			**68027**
Before catalytic converter			**68029**
After soot particulate filter			**68041**
Before soot particulate filter, 197,3 mm.			**68043**
Clase E T-Model (S212) E 220 CDI (212.202)			**2009-14**
OM 651.924	120	163	
After catalytic converter, For OE A 008 153 27 28			**68012**
Before turbocharger, 327,3 mm.			**68027**
Before catalytic converter			**68029**
Before catalytic converter			**68034**
Before soot particulate filter, 197,3 mm.			**68043**
Clase E T-Model (S212) E 220 CDI / BlueTEC (212.202, 212.201)			**2009-16**
OM 651.924	125	170	
After catalytic converter, For OE A 008 153 27 28			**68012**
Before turbocharger, 327,3 mm.			**68027**
Before catalytic converter			**68029**
Exhaust turbocharger, 257,3 mm.			**68031**
Before catalytic converter			**68034**
After soot particulate filter, For OE 9058501			**68041**
Before soot particulate filter, 197,3 mm.			**68043**
Clase E T-Model (S212) E 250 CDI / BlueTEC (212.203, 212.204)			**2009-16**
OM 651.924	150	204	
After catalytic converter, For OE A 008 153 27 28			**68012**
Before turbocharger, 327,3 mm.			**68027**
Before catalytic converter			**68029**
Before catalytic converter			**68034**
After soot particulate filter			**68041**
Before soot particulate filter, 197,3 mm.			**68043**
Clase E T-Model (S212) E 250 CDI / BlueTEC 4-matic (212.282,			**2010-16**
OM 651.924	150	204	
After catalytic converter, For OE A 008 153 27 28			**68012**
Before turbocharger, 327,3 mm.			**68027**
After soot particulate filter			**68041**
Clase E T-Model (S212) E 300 (212.255)			**2011-16**
M 276.952	185	252	
Before catalytic converter			**68094**
Clase E T-Model (S212) E 300 4-matic (212.280)			**2011-16**
M 276.952	185	252	
Before catalytic converter			**68094**
Clase E T-Model (S212) E 300 CDI (212.220)			**2009-10**
OM 642.850	150	204	
Before catalytic converter			**68012**
-> Ch. B234558, Before soot particulate filter			**68040**
After soot particulate filter, For OE 9058501			**68041**
Clase E T-Model (S212) E 300 CDI / BlueTEC (212.227, 212.221)			**2009-16**
OM 642.850, OM 642.852	170	231	
-> 06.2015, -> Ch. B234558, Before soot particulate filter			**68040**
After soot particulate filter, For OE 9058501			**68041**
Engine OM 642.852, After soot particulate filter, Model 2010,2011,2012,2013			**68094**
Clase E T-Model (S212) E 300 Hybrid / BlueTEC Hybrid (212.298)			**2011-16**
OM 651.924	150	204	
After catalytic converter, For OE A 008 153 27 28			**68012**
Before catalytic converter			**68029**
Before catalytic converter			**68034**
Before soot particulate filter, 197,3 mm.			**68043**
Clase E T-Model (S212) E 350 (212.259)			**2011-14**
M 276.952	225	306	
Before catalytic converter			**68094**
Clase E T-Model (S212) E 350 4-matic (212.288)			**2011-16**
M 276.952	225	306	
Before catalytic converter			**68094**

MERCEDES-BENZ Cont.

Clase E T-Model (S212) E 350 BlueTEC			**2012-16**
OM 642.852	185	252	
After soot particulate filter, Model 2013			**68094**
Clase E T-Model (S212) E 350 BlueTEC (212.224)			**2009-13**
OM 642.850	155	211	
Before catalytic converter			**68012**
Before soot particulate filter			**68040**
After soot particulate filter, For OE 9058501			**68041**
After soot particulate filter, Model 2010, 2011			**68094**
Clase E T-Model (S212) E 350 BlueTEC (212.226)			**2014-16**
OM 642.852	190	258	
Exhaust turbocharger, 257,3 mm.			**68031**
-> 06.2015, -> Ch. B234558, Before soot particulate filter			**68040**
Clase E T-Model (S212) E 350 BlueTEC 4-matic (212.294)			**2014-16**
OM 642.852, OM 642.858	190	258	
Exhaust turbocharger, 257,3 mm.			**68031**
-> 06.2015, -> Ch. B234558, Before soot particulate filter			**68040**
Clase E T-Model (S212) E 350 BlueTEC 4-matic (212.294)			**2012-16**
OM 642.858	185	252	
-> 06.2015, -> Ch. B234558, Before soot particulate filter			**68040**
After soot particulate filter, Model 2013			**68094**
Clase E T-Model (S212) E 350 CDI (212.223)			**2011-13**
OM 642.852	195	265	
PTC, 397,3 mm., Black			**68012**
Exhaust turbocharger, 257,3 mm.			**68031**
-> Ch. B234558, Before soot particulate filter			**68040**
After soot particulate filter			**68041**
Clase E T-Model (S212) E 350 CDI (212.225)			**2009-11**
OM 642.850	170	231	
Before catalytic converter			**68012**
Exhaust turbocharger, 257,3 mm.			**68031**
Before soot particulate filter			**68040**
After soot particulate filter, For OE 9058501			**68041**
Clase E T-Model (S212) E 350 CDI 4-matic (212.289)			**2009-11**
OM 642.856	170	231	
Before catalytic converter			**68012**
Exhaust turbocharger, 257,3 mm.			**68031**
-> Ch. B234558, Before soot particulate filter			**68040**
After soot particulate filter, -> .202010, For OE 9058501			**68041**
Clase E T-Model (S212) E 350 CDI 4-matic (212.293)			**2011-13**
OM 642.858	195	265	
Exhaust turbocharger, 257,3 mm.			**68031**
-> Ch. B234558, Before soot particulate filter			**68040**
After soot particulate filter			**68041**
Clase E T-Model (S212) E 350 CGI (212.257)			**2009-11**
M 272.983	215	292	
Before catalytic converter			**68094**
Clase G (W461) G 270 CDI			**2003 ->**
OM 612.966	115	156	
Before catalytic converter, Ch. X 172095 ->			**68012**
Clase G (W461) G 280 CDI (461.304, 461.346, 461.370, 461.334,			**2009 ->**
OM 642.884, OM 642.975	135	184	
Before catalytic converter, Ch. X 172095 ->			**68012**
Engine OM 642.975, Type 461.344/346/304/334, -> 07.2011, Particulate Filter			**68039**
OM 642.975, 07.2011 ->, Not Product. Country Algeria, Type 461.370/304/344			**68060**
Clase G (W461) G 290 TD (461.335, 461.336)			**1997 ->**
OM 602.983	88	120	
Before catalytic converter, 461.327, Ch. X 172095 ->			**68012**
Clase G (W463) G 320 CDI (463.340, 463.341, 463.343)			**2006 ->**
OM 642.970	165	224	
Before soot particulate filter, Ch. X 192671 ->			**68012**
Before soot particulate filter			**68052**
Engine OM 642.970, -> 10.2021, Catalytic Converter			**68060**
Clase G (W463) G 350 CDI			**2011 ->**
OM 642.886	155	211	
For catalytic converter, Ch. X 191362 - Ch. X 204077, With SCR system			**68012**
Engine OM 642.886, -> 10.2012, Ch. X188007 - Ch. X204077, With soot filter			**68015**
Clase G (W463) G 350 d (463.348)			**2015 ->**
OM 642.887	180	245	
Ch. X204078 ->, for vehicles with soot filter			**68015**
Clase G Cabrio (W463) G 320 CDI (463.303)			**2006 ->**
OM 642.970	165	224	
Before soot particulate filter, Ch. X 192671 ->			**68012**
Engine OM 642.970, -> 10.2021, Catalytic Converter			**68060**
Clase G Cabrio (W463) G 350 CDI			**2011 ->**
OM 642.886	155	211	
For catalytic converter, Ch. X 191362 - Ch. X 204077, With SCR system			**68012**
Engine OM 642.886, -> 10.2012, Ch. X188007 - Ch. X204077, With soot filter			**68015**
Clase GL (X164) GL 320 CDI / 350 BlueTEC 4-matic (164.824,			**2009-12**
OM 642.820	155	211	
Before soot particulate filter, Ch. A 506721 ->, For OE A 008 153 27 28			**68012**
Ch. A480007 ->, Euro 6, for vehicles with soot filter			**68015**
Engine OM 642.820, -> 08.2008, Catalytic Converter, Without SCR system			**68039**
Engine OM 642.820, 08.2008 ->, Catalytic Converter, Without SCR system			**68060**

FAE

MERCEDES-BENZ Cont.

Clase GL (X164) GL 320 CDI 4-matic (164.822)			**2006-09**
OM 642.940	165	224	
Before soot particulate filter, Ch. A 506721 ->, For OE A 008 153 27 28			**68012**
Before soot particulate filter, For OE A 007 153 84 28			**68012**
10.2008 ->, Ch. A480007 ->, Euro 6, for vehicles with soot filter			**68015**
Engine OM 642.940, -> 08.2008, Catalytic Converter, Without SCR system			**68039**
Engine OM 642.940, 08.2008 ->, Catalytic Converter, Without SCR system			**68060**
Clase GL (X164) GL 350 CDI 4-matic (164.822)			**2009-12**
OM 642.940	165	224	
Before soot particulate filter, Ch. A 506721 ->, For OE A 008 153 27 28			**68012**
Before soot particulate filter, For OE A 007 153 84 28			**68012**
Engine OM 642.940, Ch. A480007 ->, Euro 6, for vehicles with soot filter			**68015**
Engine OM 642.940, -> 08.2008, Catalytic Converter, Without SCR system			**68039**
Engine OM 642.940, 08.2008 ->, Catalytic Converter, Without SCR system			**68060**
Clase GL (X164) GL 350 CDI 4-matic (164.823)			**2010-12**
OM 642.822	195	265	
Before soot particulate filter, For OE A 008 153 27 28			**68012**
Engine OM 642.822, Ch. A480007 ->, Euro 6, for vehicles with soot filter			**68015**
Exhaust turbocharger, 257,3 mm.			**68031**
Engine OM 642.822, Catalytic Converter, Without SCR system			**68060**
Clase GL (X164) GL 420 CDI 4-matic (164.828)			**2006-09**
OM 629.912	225	306	
Ch. A503067 ->, Left, for vehicles with soot filter			**68040**
Clase GL (X164) GL 450 CDI 4-matic (164.828)			**2009-12**
OM 629.912	225	306	
12.2009 ->, Ch. A576931 ->, Right, for vehicles with soot filter			**68015**
Ch. A503067 ->, Left, for vehicles with soot filter			**68040**
Clase GL (X166) GL 350 CDI / BlueTec 4-matic (166.823, 166.824)			**2012-15**
OM 642.826	190	258	
Before catalytic converter			**68015**
Exhaust turbocharger, 257,3 mm.			**68031**
Before soot particulate filter			**68051**
Clase GLA (X156) GLA 200 CDI / d (156.908)			**2013 ->**
OM 651.930	100	136	
Exhaust turbocharger, 257,3 mm.			**68031**
Clase GLA (X156) GLA 200 CDI 4-matic (156.902)			**2013 ->**
OM 651.930	100	136	
Exhaust turbocharger, 257,3 mm.			**68031**
Clase GLA (X156) GLA 220 CDI (156.903)			**2013 ->**
OM 651.930	125	170	
Exhaust turbocharger, 257,3 mm.			**68031**
Clase GLA (X156) GLA 220 CDI / d (156.903)			**2013 ->**
OM 651.930	120	163	
Exhaust turbocharger, 257,3 mm.			**68031**
Clase GLA (X156) GLA 220 CDI / d 4-matic (156.905)			**2013 ->**
OM 651.930	120	163	
Exhaust turbocharger, 257,3 mm.			**68031**
Clase GLA (X156) GLA 220 CDI 4-matic (156.905)			**2013 ->**
OM 651.930	125	170	
Exhaust turbocharger, 257,3 mm.			**68031**
Clase GLA (X156) GLA 220 d (156.903)			**2015 ->**
OM 651.930	130	177	
Exhaust turbocharger, 257,3 mm.			**68031**
Clase GLA (X156) GLA 220 d 4-matic (156.905)			**2015 ->**
OM 651.930	130	177	
Exhaust turbocharger, 257,3 mm.			**68031**
Clase GLK (X204) 200 CDI (204.901)			**2013-15**
OM 651.916	100	136	
Before soot particulate filter			**68012**
Before turbocharger, 327,3 mm.			**68027**
Clase GLK (X204) 200 CDI (204.901)			**2010-15**
OM 651.913, OM 651.916	105	143	
Before soot particulate filter			**68012**
Before turbocharger, 327,3 mm.			**68027**
Clase GLK (X204) 220 CDI (204.902)			**2008-15**
OM 651.916	125	170	
Before soot particulate filter, For OE A 008 153 27 28			**68012**
Before turbocharger, 327,3 mm.			**68027**
Clase GLK (X204) 220 CDI (204.902)			**2008-15**
OM 651.916	120	163	
Before soot particulate filter, For OE A 008 153 27 28			**68012**
Before turbocharger, 327,3 mm.			**68027**
Clase GLK (X204) 220 CDI 4-matic (204.984)			**2008-15**
OM 651.912	120	163	
Before soot particulate filter, For OE A 008 153 27 28			**68012**
Before turbocharger, 327,3 mm.			**68027**
Clase GLK (X204) 220 CDI 4-matic (204.984, 204.997)			**2008-15**
OM 651.912	125	170	
Before soot particulate filter			**68012**
Before turbocharger, Ch. A158234 ->			**68027**
Clase GLK (X204) 250 CDI 4-matic (204.982, 204.904)			**2009-15**
OM 651.912	150	204	
Before soot particulate filter			**68012**
Before turbocharger, Ch. A158234 ->			**68027**

MERCEDES-BENZ Cont.

Clase GLK (X204) 300 4-matic (204.990)		**2009-15**
M 276.957	185	252
Before catalytic converter		**68094**
Clase GLK (X204) 320 CDI 4-matic (204.983)		**2008-15**
OM 642.961	165	224
Exhaust turbocharger, 257,3 mm.		**68031**
For catalytic converter		**68040**
Before soot particulate filter, 09.2009 ->		**68094**
Clase GLK (X204) 350 4-matic (204.988)		**2008-15**
M 276.957	225	306
Before catalytic converter		**68094**
Clase GLK (X204) 350 CDI 4-matic (204.992)		**2010-15**
OM 642.832	170	231
For catalytic converter		**68040**
Before catalytic converter		**68094**
Clase GLK (X204) 350 CDI 4-matic (204.992)		**2009-10**
OM 642.832	165	224
For catalytic converter		**68040**
Before catalytic converter		**68094**
Clase GLK (X204) 350 CDI 4-matic (204.993)		**2012-15**
OM 642.835	195	265
-> 08.2014, Exhaust turbocharger		**68031**
For catalytic converter, Euro 5, Euro 6		**68040**
Before soot particulate filter		**68094**
Clase M (W164) ML 280 CDI 4-matic (164.120)		**2005-09**
OM 642.940	140	190
Before soot particulate filter, Ch. A 506721 ->, For OE A 008 153 27 28		**68012**
Engine OM 642.940, -> 08.2008, Catalytic Converter, Without SCR system		**68039**
Engine OM 642.940, 08.2008 ->, Catalytic Converter, Without SCR system		**68060**
Clase M (W164) ML 300 CDI 4-matic (164.120)		**2009-11**
OM 642.940	140	190
07.2010-07.2011, Ch.A576931->, OE A 0081532728		**68012**
Before soot particulate filter, For OE A 007 153 84 28		**68012**
Engine OM 642.940, Ch. A480007 ->, Euro 6, for vehicles with soot filter		**68015**
Engine OM 642.940, -> 07.2009, Ch. A503515 - Ch. A536007, With soot filter		**68015**
Engine OM 642.940, -> 08.2008, Catalytic Converter, Without SCR system		**68039**
Engine OM 642.940, 08.2008 ->, Catalytic Converter, Without SCR system		**68060**
Clase M (W164) ML 300 CDI 4-matic (164.121)		**2010-11**
OM 642.820	150	204
Before soot particulate filter, Ch. A 480007 ->, For OE A 008 153 27 28		**68012**
07.2010 ->, Ch. A480007 ->, Euro 6, for vehicles with soot filter		**68015**
Engine OM 642.820, -> 08.2008, Catalytic Converter, Without SCR system		**68039**
Engine OM 642.820, 08.2008 ->, Catalytic Converter, Without SCR system		**68060**
Clase M (W164) ML 320 CDI 4-matic (164.122)		**2005-09**
OM 642.940	165	224
Before soot particulate filter, 06.2008 ->, Ch.A576931 ->, OE A 0081532728		**68012**
Before soot particulate filter, -> 06.2008, For OE A 007 153 84 28		**68012**
Engine OM 642.940, -> 08.2008, Catalytic Converter, Without SCR system		**68039**
Engine OM 642.940, 08.2008 ->, Catalytic Converter, Without SCR system		**68060**
Clase M (W164) ML 320 CDI 4-matic (164.124, 164.125, 164.122)		**2005-11**
OM 642.820, OM 642.940	155	211
Engine OM 642.820, -> 08.2008, Catalytic Converter, Without SCR system		**68039**
Engine OM 642.820, 08.2008 ->, Catalytic Converter, Without SCR system		**68060**
Clase M (W164) ML 350 CDI 4-matic (164.122)		**2009-11**
OM 642.940	165	224
07.2010-07.2011, Ch.A576931->,Before soot particulate filter, OE A0081532728		**68012**
Before soot particulate filter, For OE A 007 153 84 28		**68012**
Ch. A480007 ->, Euro 6, for vehicles with soot filter		**68015**
-> 07.2009, Ch. A503515 - Ch. A536007, for vehicles with soot filter		**68015**
Engine OM 642.940, -> 08.2008, Catalytic Converter, Without SCR system		**68039**
Engine OM 642.940, 08.2008 ->, Catalytic Converter, Without SCR system		**68060**
Clase M (W164) ML 350 CDI 4-matic (164.125, 164.124)		**2009-11**
OM 642.820	155	211
Before soot particulate filter, -> 07.2011, For OE A 008 153 27 28		**68012**
Engine OM 642.820, Ch. A480007 ->, Euro 6, for vehicles with soot filter		**68015**
Engine OM 642.820, -> 08.2008, Catalytic Converter, Without SCR system		**68039**
Engine OM 642.820, 08.2008 ->, Catalytic Converter, Without SCR system		**68060**
Clase M (W164) ML 350 CDI 4-matic (164.125, 164.124)		**2010-11**
OM 642.820	170	231
Before soot particulate filter, Ch. A 480007 ->, For OE A 008 153 27 28		**68012**
Ch. A480007 ->, Euro 6, for vehicles with soot filter		**68015**
Clase M (W164) ML 420 CDI 4-matic (164.128)		**2006-09**
OM 629.912	225	306
Engine OM 629.912, -> Ch. A576931, for vehicles with soot filter		**68015**
Clase M (W164) ML 450 CDI 4-matic (164.128)		**2009-11**
OM 629.912	225	306
12.2009 ->, Ch. A576931 ->, Right, for vehicles with soot filter		**68015**
Ch. A503067 ->, Left, for vehicles with soot filter		**68040**

FAE

MERCEDES-BENZ Cont.

Clase M (W166) ML 250 CDI / BlueTEC 4-matic (166.004, 166.003)		**2011-15**
OM 651.960	150	204
Engine OM 651.960, Euro 6, Before catalytic converter		**68015**
Before turbocharger, 327,3 mm.		**68027**
Ch. A ->, Product. Country USA, Product. Country Canada		**68043**
Ch.M000889 ->, Product. Country USA, Canada, Before particulate filter		**68043**
Ch.L000889 ->, Product. Country USA, Canada, Before particulate filter		**68043**
Clase M (W166) ML 350 BlueTEC 4-matic (166.024)		**2011-15**
OM 642.826, OM 642.864	190	258
Engine OM 642.826, Before catalytic converter		**68015**
Exhaust turbocharger, 257,3 mm.		**68031**
Clase R (W251, V251) R 280 CDI (251.121, 251.026, 251.126)		**2006-12**
OM 642.870, OM 642.872, OM 642.950	140	190
For catalytic converter, 01.2009 ->, Ch. A097787 ->, Euro 6		**68015**
Exhaust turbocharger, 257,3 mm.		**68031**
OM 642.950, 10.2007-06.2009, Catalytic Converter, W/O SCR, W/diesel soot filter		**68039**
12.2007-06.2009, Catalytic Converter, W/O SCR system, W/diesel soot filter		**68039**
For OE A 007 153 96 28, Catalytic Converter		**68060**
Before soot particulate filter, 02.2009-06.2009, Ch. A097720-Ch. A101594		**68094**
Before soot particulate filter, 07.2009 ->, Ch. A101595 ->		**68094**
Before soot particulate filter, -> 01.2009, -> Ch. A097719		**68094**
Clase R (W251, V251) R 280 CDI 4-matic (251.020)		**2006-12**
OM 642.950	140	190
Engine OM 642.950, For catalytic converter, 01.2009->, Ch.A097787->, Euro 6		**68015**
Engine OM 642.950, 12.2007-06.2009, Catalytic Converter, Without SCR system		**68039**
Engine OM 642.950, For OE A 007 153 96 28, Catalytic Converter		**68060**
Before soot particulate filter, -> 06.2009, -> Ch. A101594		**68094**
Clase R (W251, V251) R 300 CDI (251.021, 251.121, 251.026, 251.126)		**2009-12**
OM 642.870, OM 642.872, OM 642.950	140	190
For catalytic converter, Ch. A097787 ->, Euro 6		**68015**
Exhaust turbocharger, 257,3 mm.		**68031**
OM642.950, 10.2007-06.2009, Catalytic Converter, W/O SCR, W/ diesel soot filter		**68039**
OM 642.870/872, 12.2007-06.2009, Catalytic Converter, W/O SCR, W/diesel soot filter		**68039**
For OE A 007 153 96 28, Catalytic Converter		**68060**
Before soot particulate filter, Ch. A101595 ->, Without SCR system		**68094**
Clase R (W251, V251) R 300 CDI 4-matic (251.020)		**2009-12**
OM 642.950	140	190
For catalytic converter, Ch. A097787 ->, Euro 6		**68015**
Engine OM 642.950, 12.2007-06.2009, Catalytic Converter, Without SCR system		**68039**
Engine OM 642.950, For OE A 007 153 96 28, Catalytic Converter		**68060**
Clase R (W251, V251) R 320 CDI 4-matic (251.022, 251.122)		**2006-10**
OM 642.950	165	224
For catalytic converter, 01.2009 ->, Ch. A097787 ->, Euro 6		**68015**
Engine OM 642.950, 10.2007-06.2009, Catalytic Converter, Without SCR system		**68039**
Engine OM 642.950, For OE A 007 153 96 28, Catalytic Converter		**68060**
Before soot particulate filter, 02.2009-06.2009, Ch. A097720-Ch. A101594		**68094**
Before soot particulate filter, 07.2009 ->, Ch. A101595 ->		**68094**
Before soot particulate filter, -> 01.2009, -> Ch. A097719		**68094**
Clase R (W251, V251) R 320 CDI 4-matic (251.125)		**2006-12**
OM 642.870, OM 642.950	155	211
OM642.870 OM642.950, For catalytic converter, 01.2009->, Ch.A097787 ->, Euro 6		**68015**
Exhaust turbocharger, 257,3 mm.		**68031**
Before soot particulate filter, 07.2009 ->, Ch. A101595 ->		**68094**
Before soot particulate filter, -> 12.2008, -> Ch. A097719		**68094**
Clase R (W251, V251) R 350 CDI 4-matic (251.022, 251.122)		**2009-12**
OM 642.950	165	224
Engine OM 642.950, For catalytic converter, Ch. A097787 ->, Euro 6		**68015**
10.2007-06.2009, Catalytic Converter, W/O SCR system, W/ diesel soot filter		**68039**
Engine OM 642.950, For OE A 007 153 96 28, Catalytic Converter		**68060**
Before soot particulate filter, Ch. A101595 ->		**68094**
Clase R (W251, V251) R 350 CDI 4-matic (251.023, 251.123)		**2010-14**
OM 642.872	195	265
Engine OM 642.872, For catalytic converter		**68015**
Exhaust turbocharger, 257,3 mm.		**68031**
Engine OM 642.872, For OE A 007 153 96 28, Catalytic Converter		**68060**
Before soot particulate filter		**68094**
Clase R (W251, V251) R 350 CDI 4-matic (251.124, 251.125)		**2006-14**
OM 642.870, OM 642.950	155	211
For catalytic converter, 01.2009 ->, Ch. A097787 ->, Euro 6		**68015**
OM 642.950, 10.2007-06.2009, Catalytic Converter, W/O SCR, W/diesel soot filter		**68039**
Engine OM 642.870, For OE A 007 153 96 28, Catalytic Converter		**68060**
Before soot particulate filter, 07.2009 ->, Without SCR system		**68094**
Clase S (W220) S 320 CDI (220.025, 220.125)		**2002-05**
OM 648.960	150	204
Engine OM 648.960, For soot particulate filter, R.H.D.		**68015**
With factory fitted soot -/particulate filter, Before catalytic converter		**68023**
Clase S (W221) S 250 CDI (221.003, 221.103)		**2011-13**
OM 651.961	150	204
Before turbocharger, 327,3 mm.		**68027**
Clase S (W221) S 320 CDI (221.022, 221.122)		**2005-09**
OM 642.930	173	235
Exhaust turbocharger, 257,3 mm.		**68031**
Engine OM 642.930, -> 02.2009, Particulate Filter, R.H.D.		**68039**
OM 642.930, 02.2009 ->, Particulate Filter, R.H.D.		**68060**

MERCEDES-BENZ Cont.

Clase S (W221) S 320 CDI 4-matic (221.080, 221.180)			**2006-13**
OM 642.932	173	235	
Exhaust turbocharger, 257,3 mm.			**68031**
Engine OM 642.932, -> 02.2009, Particulate Filter, R.H.D.			**68039**
OM 642.932, 02.2009 ->, Particulate Filter, R.H.D.			**68060**
Clase S (W221) S 320 CDI 4-matic (221.080, 221.180)			**2005-13**
OM 642.932	155	211	
Engine OM 642.932, -> 02.2009, Particulate Filter, R.H.D.			**68039**
Engine OM 642.932, 02.2009 ->, Particulate Filter, R.H.D.			**68060**
Clase S (W221) S 350 BlueTec (221.026, 221.126)			**2011-13**
OM 642.862	190	258	
Before soot particulate filter			**68022**
Exhaust turbocharger, 257,3 mm.			**68031**
Engine OM 642.862, Particulate Filter, R.H.D.			**68060**
Clase S (W221) S 350 BlueTEC 4-matic (221.083, 221.183)			**2011-13**
OM 642.868	190	258	
Exhaust turbocharger, 257,3 mm.			**68031**
Engine OM 642.868, Particulate Filter, R.H.D.			**68060**
Clase S (W221) S 350 CDI			**2009-13**
OM 642.930	173	235	
Exhaust turbocharger, 257,3 mm.			**68031**
Clase S (W221) S 350 CDI 4-matic (221.080, 221.081)			**2009-10**
OM 642.932	155	211	
Engine OM 642.932, -> 02.2009, Particulate Filter			**68039**
Engine OM 642.932, 02.2009 ->, Particulate Filter, R.H.D.			**68060**
Clase S (W221) S 350 CDI 4-matic (221.080, 221.180)			**2009-13**
OM 642.932	173	235	
Engine OM 642.932, -> 02.2009, Particulate Filter, R.H.D.			**68039**
Engine OM 642.932, 02.2009 ->, Particulate Filter, R.H.D.			**68060**
Clase S (W222, V222, X222) S 300 BlueTEC Hybrid / h (222.004,			**2014-17**
OM 651.921	150	204	
-> Ch. A207748, Euro 6, Before catalytic converter			**68040**
Clase S (W222, V222, X222) S 300 BlueTEC Hybrid / h (222.104)			**2014-17**
OM 651.921	170	231	
Before turbocharger, 327,3 mm.			**68027**
Euro 6, Before catalytic converter			**68040**
Clase S (W222, V222, X222) S 350 BlueTEC / d (222.132, 222.032,			**2013-17**
OM 642.861	190	258	
Exhaust turbocharger, 257,3 mm.			**68031**
Clase S (W222, V222, X222) S 350 BlueTEC / d 4-matic (222.033,			**2014-17**
OM 642.861, OM 642.867	190	258	
Exhaust turbocharger, 257,3 mm.			**68031**
Clase V (W447) V 200 CDI / d (447811, 447813, 447815)			**2014 ->**
OM 651.950	100	136	
Before turbocharger, 327,3 mm.			**68027**
PTC, 347,3 mm.			**68029**
Engine OM 651.950, -> 09.2014, Before catalytic converter			**68040**
Engine OM 651.950, From Euro 5, After catalytic converter, L.H.D.			**68060**
Clase V (W447) V 220 CDI / d (447811, 447813, 447815)			**2014 ->**
OM 651.950	120	163	
Before turbocharger, 327,3 mm.			**68027**
PTC, 347,3 mm.			**68029**
-> 09.2014, Before catalytic converter			**68040**
Engine OM 651.950, From Euro 5, After catalytic converter, L.H.D.			**68060**
Clase V (W447) V 250 BlueTEC / d (447811, 447813, 447815)			**2014 ->**
OM 651.950	140	190	
Before turbocharger, 327,3 mm.			**68027**
PTC, 347,3 mm.			**68029**
Engine OM 651.950, From Euro 5, After catalytic converter, L.H.D.			**68060**
Clase V (W447) V 250 BlueTEC / d 4-matic			**2014 ->**
OM 651.950	140	190	
Before turbocharger, 327,3 mm.			**68027**
CLK (C209) 220 CDI (209.308)			**2005-09**
OM 646.966	110	150	
With factory fitted soot -/particulate filter, Euro 4, Exhaust Manifold			**68023**
Engine OM 646.966, Particulate Filter, L.H.D.			**68039**
CLK (C209) 220 CDI (209.308)			**2005-09**
OM 646.966	100	136	
With factory fitted soot -/particulate filter, Euro 4, Exhaust Manifold			**68023**
Engine OM 646.966, Particulate Filter, L.H.D.			**68039**
CLK (C209) 320 CDI (209.320)			**2005-09**
OM 642.910	165	224	
Before soot particulate filter, For OE A 007 153 84 28			**68012**
CLK Cabriolet (A209) CLK 320 CDI (209.420)			**2005-10**
OM 642.910	165	224	
Before soot particulate filter, For OE A 007 153 84 28			**68012**
CLS (C218) CLS 220 BlueTEC / d (218.301)			**2014-17**
OM 651.924	120	163	
Before turbocharger, 327,3 mm.			**68027**
Before soot particulate filter, R.H.D.			**68029**
For soot particulate filter			**68034**
Ch. A030561 ->, Before particulate filter			**68043**

FAE

MERCEDES-BENZ Cont.

CLS (C218) CLS 220 BlueTEC / d (218.301)			**2014-17**
OM 651.924	125	170	
Before turbocharger, 327,3 mm.			**68027**
For soot particulate filter, R.H.D.			**68029**
For soot particulate filter			**68034**
Ch. A030561 ->, Before particulate filter			**68043**
CLS (C218) CLS 220 BlueTEC / d (218.301)			**2014-17**
OM 651.924	130	177	
Before turbocharger, 327,3 mm.			**68027**
For soot particulate filter, R.H.D.			**68029**
For soot particulate filter			**68034**
Ch. A030561 ->, Before particulate filter			**68043**
CLS (C218) CLS 250 BlueTEC / d 4-matic (218.397)			**2014-17**
OM 651.924	150	204	
Before turbocharger, 327,3 mm.			**68027**
For soot particulate filter			**68034**
Ch. A030561 ->, Before particulate filter			**68043**
CLS (C218) CLS 250 CDI / BlueTEC / d (218.303, 218.304)			**2011-17**
OM 651.924	150	204	
Before soot particulate filter, For OE A 008 153 27 28			**68012**
PTC, 597,3 mm., Black			**68018**
Before turbocharger, 327,3 mm.			**68027**
For soot particulate filter, R.H.D.			**68029**
For soot particulate filter			**68034**
Before soot particulate filter, 197,3 mm.			**68043**
CLS (C218) CLS 350 (218.359)			**2011-14**
M 276.952	225	306	
Before catalytic converter			**68094**
CLS (C218) CLS 350 BlueTEC / d (218.326)			**2014-17**
OM 642.852, OM 642.853	190	258	
Exhaust turbocharger, 257,3 mm.			**68031**
Engine OM 642.853, -> 06.2015, Before soot particulate filter			**68040**
For soot particulate filter			**68041**
CLS (C218) CLS 350 BlueTEC / d (218.326)			**2013-17**
OM 642.852, OM 642.853	185	252	
Exhaust turbocharger, 257,3 mm.			**68031**
Engine OM 642.852, -> 06.2015, Before soot particulate filter			**68040**
For soot particulate filter			**68041**
After soot particulate filter, Model 2013			**68094**
CLS (C218) CLS 350 BlueTEC / d 4-matic (218.394)			**2013-17**
OM 642.854, OM 642.858	185	252	
Exhaust turbocharger, 257,3 mm.			**68031**
Engine OM 642.858, -> 06.2015, Before soot particulate filter			**68040**
For soot particulate filter			**68041**
After soot particulate filter, Model 2013			**68094**
CLS (C218) CLS 350 CDI / d (218.323)			**2011-14**
OM 642.852, OM 642.853	195	265	
Exhaust turbocharger, 257,3 mm.			**68031**
Engine OM 642.853, Before soot particulate filter			**68040**
After soot particulate filter			**68094**
CLS (C218) CLS 350 CDI / d 4-matic (218.393)			**2011-14**
OM 642.854, OM 642.858	195	265	
Exhaust turbocharger, 257,3 mm.			**68031**
Engine OM 642.854, Before soot particulate filter			**68040**
For soot particulate filter			**68041**
After soot particulate filter			**68094**
CLS (C218) CLS 350 d 4-matic (218.394)			**2015-17**
OM 642.854, OM 642.858	190	258	
Exhaust turbocharger, 257,3 mm.			**68031**
-> 06.2015, Before soot particulate filter			**68040**
CLS (C219) CLS 320 CDI			**2005-10**
OM 642.920	155	211	
Exhaust turbocharger, 257,3 mm.			**68031**
Before soot particulate filter			**68094**
CLS (C219) CLS 320 CDI (219.322)			**2005-10**
OM 642.920	165	224	
Exhaust turbocharger, 257,3 mm.			**68031**
Before soot particulate filter			**68094**
CLS (C219) CLS 350 (219.357)			**2006-10**
M 272.985	215	292	
Engine M 272.985			**68012**
CLS (C219) CLS 350 CDI			**2009-10**
OM 642.920	200	272	
Before soot particulate filter, 06.2009 ->, Ch. A158897 ->			**68094**
Before soot particulate filter, -> 05.2009, -> Ch. A158896			**68094**
CLS (C219) CLS 350 CDI (219.322)			**2009-10**
OM 642.920	165	224	
Exhaust turbocharger, 257,3 mm.			**68031**
Before soot particulate filter			**68094**

MERCEDES-BENZ Cont.

CLS Shooting Brake (X218) CLS 220 BlueTEC / d (218.901)			**2014-17**
OM 651.924	120	163	
Before turbocharger, 327,3 mm.			**68027**
For soot particulate filter, R.H.D.			**68029**
For soot particulate filter			**68034**
Ch. A032033 ->, Before soot particulate filter			**68043**
CLS Shooting Brake (X218) CLS 220 BlueTEC / d (218.901)			**2014-17**
OM 651.924	125	170	
Before turbocharger, 327,3 mm.			**68027**
For soot particulate filter, R.H.D.			**68029**
For soot particulate filter			**68034**
Ch. A032033 ->, Before soot particulate filter			**68043**
CLS Shooting Brake (X218) CLS 220 BlueTEC / d (218.901)			**2014-17**
OM 651.924	130	177	
Before turbocharger, 327,3 mm.			**68027**
For soot particulate filter, R.H.D.			**68029**
For soot particulate filter			**68034**
Ch. A032033 ->, Before soot particulate filter			**68043**
CLS Shooting Brake (X218) CLS 250 BlueTEC / d 4-matic (218.997)			**2014-17**
OM 651.924	150	204	
Before turbocharger, 327,3 mm.			**68027**
For soot particulate filter			**68034**
Ch. A032033 ->, Before soot particulate filter			**68043**
CLS Shooting Brake (X218) CLS 250 CDI / BlueTEC / d (218.903,			**2012-17**
OM 651.924	150	204	
Before soot particulate filter, 218.903, For OE A 008 153 27 28			**68012**
Before turbocharger, 327,3 mm.			**68027**
For soot particulate filter, R.H.D.			**68029**
For soot particulate filter			**68034**
Before soot particulate filter, 197,3 mm.			**68043**
CLS Shooting Brake (X218) CLS 350 (218.959)			**2012-14**
M 276.952	225	306	
Before catalytic converter			**68094**
CLS Shooting Brake (X218) CLS 350 BlueTEC / d (218.926)			**2014-17**
OM 642.852, OM 642.853	190	258	
Exhaust turbocharger, 257,3 mm.			**68031**
Engine OM 642.853, -> 06.2015, Before soot particulate filter			**68040**
For soot particulate filter			**68041**
CLS Shooting Brake (X218) CLS 350 BlueTEC / d 4-matic (218.994)			**2014-17**
OM 642.854, OM 642.858	185	252	
Exhaust turbocharger, 257,3 mm.			**68031**
For soot particulate filter			**68041**
CLS Shooting Brake (X218) CLS 350 CDI / d (218.923)			**2012-14**
OM 642.852, OM 642.853	195	265	
Exhaust turbocharger, 257,3 mm.			**68031**
Before soot particulate filter			**68040**
For soot particulate filter, For OE 9058501			**68041**
After soot particulate filter			**68094**
CLS Shooting Brake (X218) CLS 350 CDI / d 4-matic (218.993)			**2012-14**
OM 642.853, OM 642.854	195	265	
Exhaust turbocharger, 257,3 mm.			**68031**
Engine OM 642.854, Before soot particulate filter			**68040**
For soot particulate filter, For OE 9058501			**68041**
After soot particulate filter			**68094**
CLS Shooting Brake (X218) CLS 350 d 4-matic (218.994)			**2015-17**
OM 642.854, OM 642.858	190	258	
Exhaust turbocharger, 257,3 mm.			**68031**
-> 06.2015, Before soot particulate filter			**68040**
GLC (X253) 220 d 4-matic (253.905, 253.903)			**2015-19**
OM 651.921	125	170	
Before catalytic converter			**68034**
GLC (X253) 220 d 4-matic (253.905, 253.903)			**2015-19**
OM 651.921	120	163	
Before catalytic converter			**68034**
GLC (X253) 250 d 4-matic (253.909)			**2015-19**
OM 651.921	150	204	
Before catalytic converter			**68034**
GLC Coupe (C253) 220 d 4-matic (253.303, 253.305)			**2016-19**
OM 651.921	125	170	
Before catalytic converter			**68034**
GLC Coupe (C253) 250 d 4-matic (253.309)			**2016-19**
OM 651.921	150	204	
Before catalytic converter			**68034**
GLE (W166) 250 d (166.006)			**2015-18**
OM 651.960	150	204	
Euro 6, Before catalytic converter			**68015**
Before soot particulate filter, 197,3 mm.			**68043**
GLE (W166) 250 d 4-matic (166.004)			**2015-18**
OM 651.960	150	204	
Euro 6, Before catalytic converter			**68015**
Before soot particulate filter, 197,3 mm.			**68043**

FAE

MERCEDES-BENZ Cont.

GLE (W166) 350 d 4-matic (166.024)			**2015-18**
OM 642.826	190	258	
Euro 6, Before catalytic converter			**68015**
Exhaust turbocharger, 257,3 mm.			**68031**
GLE Coupe (C292) 350 d 4-matic (292.323, 292.324)			**2015-19**
OM 642.824, OM 642.826	190	258	
Before catalytic converter			**68015**
Exhaust turbocharger, 257,3 mm.			**68031**
Marco Polo Camper (W447) 200 CDI (447.703, 447.813)			**2015 ->**
OM 651.950	100	136	
Engine OM 651.950, From Euro 5, After catalytic converter, L.H.D.			**68060**
Marco Polo Camper (W447) 200 CDI 4-matic (447.703, 447.813)			**2015 ->**
OM 651.950	100	136	
Engine OM 651.950, From Euro 5, After catalytic converter, L.H.D.			**68060**
Marco Polo Camper (W447) 220 CDI (447.703, 447.813)			**2015 ->**
OM 651.950	120	163	
Engine OM 651.950, From Euro 5, After catalytic converter, L.H.D.			**68060**
Marco Polo Camper (W447) 220 CDI 4-matic (447.703, 447.813)			**2015 ->**
OM 651.950	120	163	
Engine OM 651.950, From Euro 5, After catalytic converter, L.H.D.			**68060**
Marco Polo Camper (W447) 250 CDI (447.703, 447.813)			**2015 ->**
OM 651.950	140	190	
Engine OM 651.950, From Euro 5, After catalytic converter, L.H.D.			**68060**
Marco Polo Camper (W447) 250 CDI 4-matic (447.703, 447.813)			**2015 ->**
OM 651.950	140	190	
Engine OM 651.950, From Euro 5, After catalytic converter, L.H.D.			**68060**
SLK (R172) 250 CDI / d (172.403)			**2012 ->**
OM 651.980	150	204	
Before turbocharger, 327,3 mm.			**68027**
PTC, 336 mm.			**68034**
Before soot particulate filter, 197,3 mm.			**68043**
Sprinter 3,5-t Bus (B906) 310 CDI (906.731, 906.733, 906.735)			**2009-13**
OM 651.955, OM 651.956	70	95	
Ch. P134932 ->, Particulate Filter			**68004**
Ch. P134932 - Ch. P269422, Before SCR catalytic converter, With SCR system			**68004**
PTC, 597,3 mm., Black			**68018**
Before turbocharger, 327,3 mm.			**68027**
Before soot particulate filter, With factory fitted soot -/particulate filter			**68071**
Sprinter 3,5-t Bus (B906) 311 CDI (906.731, 906.733, 906.735)			**2016 ->**
OM 651.955, OM 651.956	84	114	
Before soot particulate filter, With factory fitted soot -/particulate filter			**68071**
Sprinter 3,5-t Bus (B906) 311 CDI (906.731, 906.733, 906.735)			**2006-09**
OM 646.985	80	109	
For soot particulate filter, Euro 3 (D4)			**68015**
PTC, 597,3 mm., Black			**68018**
After catalytic converter, 1082.3 mm., Black			**68046**
Ch. S 471810 ->, Catalytic Converter			**68077**
Sprinter 3,5-t Bus (B906) 311 CDI 4x4 (906.731, 906.733, 906.735)			**2008-09**
OM 646.985	80	109	
For soot particulate filter, 08.2008 ->, Euro 3 (D4)			**68015**
Ch. L 100000, F 401031 ->			**68018**
Exhaust turbocharger, 257,3 mm.			**68031**
After catalytic converter, 1082.3 mm., Black			**68046**
Ch. S 471810 ->, Catalytic Converter			**68077**
Sprinter 3,5-t Bus (B906) 313 CDI (906.731, 906.733, 906.735)			**2011-16**
OM 651.955, OM 651.956, OM 651.957	95	129	
Ch. P134932, Particulate Filter			**68004**
Ch. P134932 - Ch. P269422, Before SCR catalytic converter, With SCR system			**68004**
PTC, 597,3 mm., Black			**68018**
Before turbocharger, 327,3 mm.			**68027**
Before soot particulate filter, With factory fitted soot -/particulate filter			**68071**
Sprinter 3,5-t Bus (B906) 313 CDI 4x4 (906.731, 906.733, 906.735)			**2011-16**
OM 651.955, OM 651.956, OM 651.957	95	129	
Ch. P134932 - Ch. P269422, Before SCR catalytic converter, With SCR system			**68004**
Ch. P134932, Particulate Filter			**68004**
PTC, 597,3 mm., Black			**68018**
Before turbocharger, 327,3 mm.			**68027**
Before soot particulate filter, With factory fitted soot -/particulate filter			**68071**
Sprinter 3,5-t Bus (B906) 314 CDI (906.731, 906.733, 906.735)			**2016 ->**
OM 651.955, OM 651.956	105	143	
Before soot particulate filter, With factory fitted soot -/particulate filter			**68071**
Sprinter 3,5-t Bus (B906) 314 CDI 4x4 (906.731, 906.733, 906.735)			**2016 ->**
OM 651.955, OM 651.956	105	143	
Before soot particulate filter, With factory fitted soot -/particulate filter			**68071**
Sprinter 3,5-t Bus (B906) 315 CDI (906.731, 906.733, 906.735)			**2006-09**
OM 646.986, OM 646.989, OM 646.990	110	150	
For soot particulate filter, Euro 3 (D4)			**68015**
PTC, 597,3 mm., Black			**68018**
After catalytic converter, 1082.3 mm., Black			**68046**
Engine OM 646.986, Ch. S 471810 ->, Catalytic Converter			**68077**

MERCEDES-BENZ Cont.

Sprinter 3,5-t Bus (B906) 315 CDI 4x4 (906.731, 906.733, 906.735)			**2008-09**
OM 646.986, OM 646.989, OM 646.990	110	150	
For soot particulate filter, Euro 3 (D4)			**68015**
PTC, 597,3 mm., Black			**68018**
After catalytic converter, 1082.3 mm., Black			**68046**
Engine OM 646.986, Ch. S 471810 ->, Catalytic Converter			**68077**
Sprinter 3,5-t Bus (B906) 316 CDI (906.731, 906.733, 906.735)			**2011 ->**
OM 651.955, OM 651.956, OM 651.957	120	163	
Ch. P134932 ->, Particulate Filter			**68004**
Ch. P134932 - Ch. P269422, Before SCR catalytic converter, With SCR system			**68004**
PTC, 597,3 mm., Black			**68018**
Before turbocharger, 327,3 mm.			**68027**
Before soot particulate filter, With factory fitted soot -/particulate filter			**68071**
Sprinter 3,5-t Bus (B906) 316 CDI 4x4 (906.731, 906.733, 906.735)			**2011 ->**
OM 651.955, OM 651.956, OM 651.957	120	163	
Ch. P134932 ->, Particulate Filter			**68004**
Ch. P134932 - Ch. P269422, Before SCR catalytic converter, With SCR system			**68004**
PTC, 597,3 mm., Black			**68018**
Before turbocharger, 327,3 mm.			**68027**
Before soot particulate filter, With factory fitted soot -/particulate filter			**68071**
Sprinter 3,5-t Bus (B906) 318 CDI (906.731, 906.733, 906.735)			**2008-09**
OM 642.896, OM 642.986, OM 642.992, OM 642.993	135	184	
EGR valve at manifold			**68012**
Engine OM 642.993, OM 642.896, OM 642.992, For soot particulate filter			**68015**
07.2009 ->			**68018**
Exhaust turbocharger, 257,3 mm.			**68031**
After catalytic converter, 1082.3 mm., Black			**68046**
Sprinter 3,5-t Bus (B906) 318 CDI 4x4 (906.731, 906.733, 906.735)			**2008-09**
OM 642.896, OM 642.986, OM 642.992, OM 642.993	135	184	
EGR valve at manifold			**68012**
OM 642.896 OM 642.992 OM 642.993, For soot particulate filter, Euro 3 (D4)			**68015**
PTC, 597,3 mm., Black			**68018**
After catalytic converter, 1082.3 mm., Black			**68046**
Sprinter 3,5-t Bus (B906) 319 CDI / BlueTEC (906.731, 906.733,			**2009 ->**
OM 642.896, OM 642.898, OM 642.986, OM 642.992	140	190	
Ch. E124432 ->, Ch. P134932 ->, Before soot particulate filter			**68004**
Ch. S765216 ->, Before SCR catalytic converter, With SCR system			**68004**
EGR valve at manifold			**68012**
PTC, 597,3 mm., Black			**68018**
After catalytic converter, 1082.3 mm., Black			**68046**
Sprinter 3,5-t Bus (B906) 319 CDI / BlueTEC 4x4 (906.731, 906.733,			**2009 ->**
OM 642.896, OM 642.898, OM 642.986, OM 642.992	140	190	
Ch.P134932->, Ch.S765216->, Before SCR catalytic converter, With SCR system			**68004**
Ch. P134932 ->, Ch. E124432 ->, Before soot particulate filter			**68004**
EGR valve at manifold			**68012**
PTC, 597,3 mm., Black			**68018**
Sprinter 3,5-t Chassis (B906) 309 CDI (906.131, 906.133, 906.135,			**2006-09**
OM 646.984	65	88	
For soot particulate filter, Euro 3 (D4)			**68015**
PTC, 597,3 mm., Black			**68018**
Exhaust turbocharger, 257,3 mm.			**68031**
After catalytic converter, 1082.3 mm., Black			**68046**
Ch. S 471810 ->, Catalytic Converter			**68077**
Sprinter 3,5-t Chassis (B906) 310 CDI (906.131, 906.133, 906.135,			**2009-16**
OM 651.955, OM 651.956	70	95	
Ch. N623655 - Ch. N671853, Before SCR catalytic converter, With SCR system			**68004**
Ch. N623655 - Ch. N661488, Particulate Filter			**68004**
07.2009 ->			**68018**
Before turbocharger, 327,3 mm.			**68027**
Sprinter 3,5-t Chassis (B906) 311 CDI (906.131, 906.133, 906.135,			**2006-09**
OM 646.985	80	109	
For soot particulate filter, Euro 3 (D4)			**68015**
PTC, 597,3 mm., Black			**68018**
Exhaust turbocharger, 257,3 mm.			**68031**
After catalytic converter, 1082.3 mm., Black			**68046**
Engine OM 646.985, Ch. S 471810 ->, Catalytic Converter			**68077**
Sprinter 3,5-t Chassis (B906) 311 CDI 4x4 (906.131, 906.133,			**2008-09**
OM 646.985	80	109	
For soot particulate filter, 08.2008 ->, Euro 3 (D4)			**68015**
PTC, 597,3 mm., Black			**68018**
Exhaust turbocharger, 257,3 mm.			**68031**
After catalytic converter, 1082.3 mm., Black			**68046**
Ch. S 471810 ->, Catalytic Converter			**68077**
Sprinter 3,5-t Chassis (B906) 313 CDI (906.131, 906.133, 906.135,			**2006-16**
OM 651.955, OM 651.956, OM 651.957	95	129	
Ch. N623655 - Ch. N671853, Before SCR catalytic converter, With SCR system			**68004**
Ch. N623655 - Ch. N661488, Particulate Filter			**68004**
05.2009 ->			**68018**
Before turbocharger, 327,3 mm.			**68027**
Sprinter 3,5-t Chassis (B906) 313 CDI (906.131, 906.133, 906.135,			**2006-16**
OM 646.986	95	129	
For soot particulate filter, Euro 3 (D4)			**68015**
-> 12.2010			**68018**

FAE

MERCEDES-BENZ Cont.

Sprinter 3,5-t Chassis (B906) 313 CDI 4x4 (906.131, 906.133,			**2006-16**
OM 651.955, OM 651.956, OM 651.957	95	129	
Ch. N623655 - Ch. N671853, Before SCR catalytic converter, With SCR system			**68004**
Ch. N623655 - Ch. N661488, Particulate Filter			**68004**
08.2013 ->			**68018**
Before turbocharger, 327,3 mm.			**68027**
Sprinter 3,5-t Chassis (B906) 315 CDI (906.131, 906.133, 906.135,			**2006-09**
OM 646.986, OM 646.989, OM 646.990	110	150	
For soot particulate filter, Euro 3 (D4)			**68015**
PTC, 597,3 mm., Black			**68018**
Exhaust turbocharger, 257,3 mm.			**68031**
After catalytic converter, 1082.3 mm., Black			**68046**
Engine OM 646.986, Ch. S 471810 ->, Catalytic Converter			**68077**
Sprinter 3,5-t Chassis (B906) 315 CDI 4x4 (906.131, 906.133,			**2008-09**
OM 646.986, OM 646.989, OM 646.990	110	150	
For soot particulate filter, Euro 3 (D4)			**68015**
PTC, 597,3 mm., Black			**68018**
Exhaust turbocharger, 257,3 mm.			**68031**
After catalytic converter, 1082.3 mm., Black			**68046**
Engine OM 646.986, Ch. S 471810 ->, Catalytic Converter			**68077**
Sprinter 3,5-t Chassis (B906) 316 CDI (906.131, 906.133, 906.135,			**2009 ->**
OM 651.955, OM 651.956, OM 651.957	120	163	
Ch. N623655 - Ch. N671853, Before SCR catalytic converter, With SCR system			**68004**
Ch. N623655 - Ch. N661488, Particulate Filter			**68004**
07.2009 ->			**68018**
Before turbocharger, 327,3 mm.			**68027**
Exhaust turbocharger, 257,3 mm.			**68031**
After catalytic converter, 1082.3 mm., Black			**68046**
Sprinter 3,5-t Chassis (B906) 316 CDI 4x4 (906.131, 906.133,			**2009 ->**
OM 651.955, OM 651.956, OM 651.957	120	163	
Ch. E119193 ->, Ch. N623655 ->, Before soot particulate filter			**68004**
Ch. N623655 - Ch. N671853, Before SCR catalytic converter, With SCR system			**68004**
07.2009 ->			**68018**
Before turbocharger, 327,3 mm.			**68027**
Exhaust turbocharger, 257,3 mm.			**68031**
After catalytic converter, 1082.3 mm., Black			**68046**
Sprinter 3,5-t Chassis (B906) 318 CDI (906.131, 906.133, 906.135,			**2006-09**
OM 642.896, OM 642.992, OM 642.993	135	184	
EGR valve at manifold			**68012**
For soot particulate filter, Euro 3 (D4)			**68015**
07.2009 ->			**68018**
Exhaust turbocharger, 257,3 mm.			**68031**
After catalytic converter, 1082.3 mm., Black			**68046**
Sprinter 3,5-t Chassis (B906) 318 CDI 4x4 (906.131, 906.133,			**2008-09**
OM 642.896, OM 642.992, OM 642.993	135	184	
EGR valve at manifold			**68012**
For soot particulate filter, Euro 3 (D4)			**68015**
Engine OM 642.896, 07.2009 ->			**68018**
Exhaust turbocharger, 257,3 mm.			**68031**
After catalytic converter, 1082.3 mm., Black			**68046**
Sprinter 3,5-t Chassis (B906) 319 CDI / BlueTEC (906.131, 906.133,			**2009 ->**
OM 642.896, OM 642.898, OM 642.992	140	190	
Ch. N623655 - Ch. N671853, Before SCR catalytic converter, With SCR system			**68004**
Ch. E119193 ->, Ch. N623655 ->, Before soot particulate filter			**68004**
EGR valve at manifold			**68012**
Engine OM 642.896			**68018**
Exhaust turbocharger, 257,3 mm.			**68031**
After catalytic converter, 1082.3 mm., Black			**68046**
Sprinter 3,5-t Chassis (B906) 319 CDI / BlueTEC 4x4 (906.131,			**2011 ->**
OM 642.896, OM 642.898, OM 642.992	140	190	
Ch. N623655 ->, Ch. E119193 ->, Before soot particulate filter			**68004**
Ch. N623655 - Ch. N671853, Before SCR catalytic converter, With SCR system			**68004**
EGR valve at manifold			**68012**
PTC, 597,3 mm., Black			**68018**
Sprinter 3,5-t Chassis (B907, B910) 311 CDI RWD (907.131,			**2018 ->**
OM 651.958	84	114	
Before soot particulate filter, With factory fitted soot -/particulate filter			**68071**
Sprinter 3,5-t Chassis (B907, B910) 314 CDI A las 4 ruedas			**2019 ->**
OM 651.958	105	143	
Before soot particulate filter, With factory fitted soot -/particulate filter			**68071**
Sprinter 3,5-t Chassis (B907, B910) 314 CDI RWD (907.131,			**2018 ->**
OM 651.958	105	143	
Before soot particulate filter, With factory fitted soot -/particulate filter			**68071**
Sprinter 3,5-t Chassis (B907, B910) 316 CDI A las 4 ruedas			**2019 ->**
OM 651.958	120	163	
Before soot particulate filter, With factory fitted soot -/particulate filter			**68071**
Sprinter 3,5-t Chassis (B907, B910) 316 CDI RWD (907.131,			**2018 ->**
OM 651.958	120	163	
Before soot particulate filter, With factory fitted soot -/particulate filter			**68071**
Sprinter 3,5-t Tourer Bus (B907) 311 CDI (907.731, 907.733,			**2018 ->**
OM 651.958	84	114	
Before soot particulate filter, With factory fitted soot -/particulate filter			**68071**

MERCEDES-BENZ Cont.

Sprinter 3,5-t Tourer Bus (B907) 314 CDI (907.731, 907.733,			**2018 ->**
OM 651.958	105	143	
Before soot particulate filter, With factory fitted soot -/particulate filter			**68071**
Sprinter 3,5-t Tourer Bus (B907) 314 CDI A las 4 ruedas (907.733)			**2019 ->**
OM 651.958	105	143	
Before soot particulate filter, With factory fitted soot -/particulate filter			**68071**
Sprinter 3,5-t Tourer Bus (B907) 316 CDI (907.731, 907.733,			**2018 ->**
OM 651.958	120	163	
Before soot particulate filter, With factory fitted soot -/particulate filter			**68071**
Sprinter 3,5-t Tourer Bus (B907) 316 CDI A las 4 ruedas (907.733)			**2019 ->**
OM 651.958	120	163	
Before soot particulate filter, With factory fitted soot -/particulate filter			**68071**
Sprinter 3,5-t Van (B906) 309 CDI (906.631, 906.633, 906.635,			**2006-09**
OM 646.984	65	88	
For soot particulate filter, Euro 3 (D4)			**68015**
PTC, 597,3 mm., Black			**68018**
Exhaust turbocharger, 257,3 mm.			**68031**
Ch. S 471810 ->, Catalytic Converter			**68077**
Sprinter 3,5-t Van (B906) 310 CDI (906.631, 906.633, 906.635,			**2009 ->**
OM 651.955, OM 651.956	70	95	
Ch. P134932 ->, Particulate Filter			**68004**
Ch. P134932 - Ch. P269422, Before SCR catalytic converter, With SCR system			**68004**
PTC, 597,3 mm., Black			**68018**
Before turbocharger, 327,3 mm.			**68027**
Before soot particulate filter, With factory fitted soot -/particulate filter			**68071**
Sprinter 3,5-t Van (B906) 311 CDI (906.631, 906.633, 906.635,			**2016 ->**
OM 651.955, OM 651.956	84	114	
Before soot particulate filter, With factory fitted soot -/particulate filter			**68071**
Sprinter 3,5-t Van (B906) 311 CDI (906.631, 906.633, 906.635,			**2006-09**
OM 646.985	80	109	
For soot particulate filter, Euro 3 (D4)			**68015**
Ch. A 101582 ->			**68018**
Exhaust turbocharger, 257,3 mm.			**68031**
After catalytic converter, 1082.3 mm., Black			**68046**
Ch. S 471810 ->, Catalytic Converter			**68077**
Sprinter 3,5-t Van (B906) 311 CDI 4x4 (906.631, 906.633, 906.635,			**2008-09**
OM 646.985	80	109	
For soot particulate filter, 08.2008 ->, Euro 3 (D4)			**68015**
Ch. A 101582 ->			**68018**
Exhaust turbocharger, 257,3 mm.			**68031**
After catalytic converter, 1082.3 mm., Black			**68046**
Ch. S 471810 ->, Catalytic Converter			**68077**
Sprinter 3,5-t Van (B906) 313 CDI (906.631, 906.633, 906.635,			**2009 ->**
OM 651.940, OM 651.955, OM 651.956, OM 651.957	95	129	
Ch. P134932 - Ch. P269422, Before SCR catalytic converter, With SCR system			**68004**
Ch. P134932 ->, Particulate Filter			**68004**
Before turbocharger, 327,3 mm.			**68027**
Before soot particulate filter, With factory fitted soot -/particulate filter			**68071**
Sprinter 3,5-t Van (B906) 313 CDI (906.631, 906.633, 906.635,			**2006 ->**
OM 646.986	95	129	
For soot particulate filter, Euro 3 (D4)			**68015**
PTC, 597,3 mm., Black			**68018**
Sprinter 3,5-t Van (B906) 313 CDI 4x4 (906.631, 906.633, 906.635,			**2009 ->**
OM 651.955, OM 651.956, OM 651.957	95	129	
Ch. P134932 ->, Particulate Filter			**68004**
Ch. P134932 - Ch. P269422, Before SCR catalytic converter, With SCR system			**68004**
PTC, 597,3 mm., Black			**68018**
Before turbocharger, 327,3 mm.			**68027**
Before soot particulate filter, With factory fitted soot -/particulate filter			**68071**
Sprinter 3,5-t Van (B906) 314 CDI (906.631, 906.633, 906.635,			**2016 ->**
OM 651.955, OM 651.956	105	143	
Before soot particulate filter, With factory fitted soot -/particulate filter			**68071**
Sprinter 3,5-t Van (B906) 314 CDI 4x4 (906.631, 906.633, 906.635,			**2016 ->**
OM 651.955, OM 651.956	105	143	
Before soot particulate filter, With factory fitted soot -/particulate filter			**68071**
Sprinter 3,5-t Van (B906) 315 CDI (906.631, 906.633, 906.635,			**2006-09**
OM 646.986, OM 646.989, OM 646.990	110	150	
For soot particulate filter, Euro 3 (D4)			**68015**
PTC, 597,3 mm., Black			**68018**
Exhaust turbocharger, 257,3 mm.			**68031**
After catalytic converter, 1082.3 mm., Black			**68046**
Engine OM 646.986, Ch. S 471810 ->, Catalytic Converter			**68077**
Sprinter 3,5-t Van (B906) 315 CDI 4x4 (906.631, 906.633, 906.635,			**2008-09**
OM 646.986, OM 646.989, OM 646.990	110	150	
For soot particulate filter, Euro 3 (D4)			**68015**
PTC, 597,3 mm., Black			**68018**
Exhaust turbocharger, 257,3 mm.			**68031**
After catalytic converter, 1082.3 mm., Black			**68046**
Engine OM 646.986, Ch. S 471810 ->, Catalytic Converter			**68077**

FAE

MERCEDES-BENZ Cont.

Sprinter 3,5-t Van (B906) 316 CDI (906.631, 906.633, 906.635,			**2009 ->**
OM 651.955, OM 651.956, OM 651.957	120	163	
Ch. P134932 ->, Particulate Filter			**68004**
Ch. P134932 - Ch. P269422, Before SCR catalytic converter, With SCR system			**68004**
07.2009 ->			**68018**
Before turbocharger, 327,3 mm.			**68027**
Exhaust turbocharger, 257,3 mm.			**68031**
After catalytic converter, 1082.3 mm., Black			**68046**
Before soot particulate filter, With factory fitted soot -/particulate filter			**68071**
Sprinter 3,5-t Van (B906) 316 CDI 4x4 (906.631, 906.633, 906.635,			**2009 ->**
OM 651.955, OM 651.956, OM 651.957	120	163	
Ch. P134932 - Ch. P269422, Before SCR catalytic converter, With SCR system			**68004**
Ch. P134932 ->, Particulate Filter			**68004**
PTC, 597,3 mm., Black			**68018**
Before turbocharger, 327,3 mm.			**68027**
Exhaust turbocharger, 257,3 mm.			**68031**
After catalytic converter, 1082.3 mm., Black			**68046**
Before soot particulate filter, With factory fitted soot -/particulate filter			**68071**
Sprinter 3,5-t Van (B906) 318 CDI (906.631, 906.633, 906.635,			**2006-09**
OM 642.896, OM 642.986, OM 642.992, OM 642.993	135	184	
EGR valve at manifold			**68012**
For soot particulate filter, Euro 3 (D4)			**68015**
Ch. A 101582 ->			**68018**
Exhaust turbocharger, 257,3 mm.			**68031**
After catalytic converter, 1082.3 mm., Black			**68046**
Sprinter 3,5-t Van (B906) 318 CDI 4x4 (906.631, 906.633, 906.635,			**2008-09**
OM 642.896, OM 642.986, OM 642.992, OM 642.993	135	184	
EGR valve at manifold			**68012**
For soot particulate filter, Euro 3 (D4)			**68015**
Ch. A 324554 ->			**68018**
Exhaust turbocharger, 257,3 mm.			**68031**
After catalytic converter, 1082.3 mm., Black			**68046**
Sprinter 3,5-t Van (B906) 319 CDI / BlueTEC (906.631, 906.633,			**2009 ->**
OM 642.896, OM 642.898, OM 642.986, OM 642.992	140	190	
Ch. P134932 - Ch. S765216, Before SCR catalytic converter, With SCR system			**68004**
Ch. E124432 ->, Ch. P134932 ->, Before soot particulate filter			**68004**
EGR valve at manifold			**68012**
PTC, 597,3 mm., Black			**68018**
Exhaust turbocharger, 257,3 mm.			**68031**
After catalytic converter, 1082.3 mm., Black			**68046**
Sprinter 3,5-t Van (B906) 319 CDI / BlueTEC 4x4 (906.631, 906.633,			**2009 ->**
OM 642.896, OM 642.898, OM 642.986, OM 642.992	140	190	
Ch. E124432 ->, Ch. P134932 ->, Before soot particulate filter			**68004**
Ch.P134932->, Ch.S765216->, Before SCR catalytic converter, With SCR system			**68004**
EGR valve at manifold			**68012**
PTC, 597,3 mm., Black			**68018**
Sprinter 3,5-t Van (B907, B910) 311 CDI RWD (907.633, 907.635,			**2018 ->**
OM 651.958	84	114	
Before soot particulate filter, With factory fitted soot -/particulate filter			**68071**
Sprinter 3,5-t Van (B907, B910) 314 CDI A las 4 ruedas (907.633,			**2019 ->**
OM 651.958	105	143	
Before soot particulate filter, With factory fitted soot -/particulate filter			**68071**
Sprinter 3,5-t Van (B907, B910) 314 CDI RWD (907.631, 907.633,			**2018 ->**
OM 651.958	105	143	
Before soot particulate filter, With factory fitted soot -/particulate filter			**68071**
Sprinter 3,5-t Van (B907, B910) 316 CDI A las 4 ruedas (907.633,			**2019 ->**
OM 651.958	120	163	
Before soot particulate filter, With factory fitted soot -/particulate filter			**68071**
Sprinter 3,5-t Van (B907, B910) 316 CDI RWD (907.631, 907.633,			**2018 ->**
OM 651.958	120	163	
Before soot particulate filter, With factory fitted soot -/particulate filter			**68071**
Sprinter 3-t Bus (B906) 210 CDI (906.711, 906.713)			**2009-13**
OM 651.955, OM 651.956	70	95	
Ch. P134932 ->, Particulate Filter			**68004**
Ch. P134932 - Ch. P269422, Before SCR catalytic converter, With SCR system			**68004**
08.2013 ->			**68018**
Before turbocharger, 327,3 mm.			**68027**
Before soot particulate filter, With factory fitted soot -/particulate filter			**68071**
Sprinter 3-t Bus (B906) 211 CDI (906.711, 906.713)			**2016 ->**
OM 651.955, OM 651.956	84	114	
Before soot particulate filter, With factory fitted soot -/particulate filter			**68071**
Sprinter 3-t Bus (B906) 211 CDI (906.711, 906.713)			**2006-09**
OM 646.985	80	109	
For soot particulate filter, Euro 3 (D4)			**68015**
Ch. F 401031 ->			**68018**
Exhaust turbocharger, 257,3 mm.			**68031**
After catalytic converter, 1082.3 mm., Black			**68046**
Ch. S 471810 ->, Catalytic Converter			**68077**

MERCEDES-BENZ Cont.

Sprinter 3-t Bus (B906) 213 CDI (906.711, 906.713)		**2006-16**
OM 651.955, OM 651.956, OM 651.957	95	129
Ch. P134932 ->, Particulate Filter		**68004**
Ch. P134932 - Ch. P269422, Before SCR catalytic converter, With SCR system		**68004**
PTC, 597,3 mm., Black		**68018**
Before turbocharger, 327,3 mm.		**68027**
Before soot particulate filter, With factory fitted soot -/particulate filter		**68071**
Sprinter 3-t Bus (B906) 214 CDI (906.711, 906.713)		**2016 ->**
OM 651.955, OM 651.956	105	143
Before soot particulate filter, With factory fitted soot -/particulate filter		**68071**
Sprinter 3-t Bus (B906) 215 CDI (906.711, 906.713)		**2006-09**
OM 646.986, OM 646.989, OM 646.990	110	150
PTC, 597,3 mm., Black		**68018**
After catalytic converter, 1082.3 mm., Black		**68046**
Engine OM 646.990, Ch. S 471810 ->, Catalytic Converter		**68077**
Sprinter 3-t Bus (B906) 216 CDI (906.711, 906.713)		**2006 ->**
OM 651.955, OM 651.956, OM 651.957	120	163
Ch. P134932 ->, Particulate Filter		**68004**
Ch. P134932 - Ch. P269422, Before SCR catalytic converter, With SCR system		**68004**
PTC, 597,3 mm., Black		**68018**
Before turbocharger, 327,3 mm.		**68027**
Before soot particulate filter, With factory fitted soot -/particulate filter		**68071**
Sprinter 3-t Chassis (B906) 209 CDI (906.111, 906.113, 906.211,		**2006-09**
OM 646.984	65	88
For soot particulate filter, Euro 3 (D4)		**68015**
PTC, 597,3 mm., Black		**68018**
After catalytic converter, 1082.3 mm., Black		**68046**
Ch. S 471810 ->, Catalytic Converter		**68077**
Sprinter 3-t Chassis (B906) 210 CDI (906.111, 906.113, 906.211,		**2009-16**
OM 651.955, OM 651.956	70	95
Ch. N623655 - Ch. N671853, Before SCR catalytic converter, With SCR system		**68004**
Ch. N623655 - Ch. N661488, Particulate Filter		**68004**
07.2009 ->		**68018**
Before turbocharger, 327,3 mm.		**68027**
After catalytic converter, 1082.3 mm., Black		**68046**
Before soot particulate filter, With factory fitted soot -/particulate filter		**68071**
Sprinter 3-t Chassis (B906) 211 CDI (906.111, 906.113, 906.211,		**2016 ->**
OM 651.955, OM 651.956	84	114
Before soot particulate filter, With factory fitted soot -/particulate filter		**68071**
Sprinter 3-t Chassis (B906) 211 CDI (906.111, 906.113, 906.211,		**2006-09**
OM 646.985	80	109
For soot particulate filter, Euro 3 (D4)		**68015**
PTC, 597,3 mm., Black		**68018**
Exhaust turbocharger, 257,3 mm.		**68031**
After catalytic converter, 1082.3 mm., Black		**68046**
Ch. S 471810 ->, Catalytic Converter		**68077**
Sprinter 3-t Chassis (B906) 213 CDI (906.111, 906.113, 906.211,		**2006-09**
OM 646.986	95	129
For soot particulate filter, Euro 3 (D4)		**68015**
PTC, 597,3 mm., Black		**68018**
Exhaust turbocharger, 257,3 mm.		**68031**
Sprinter 3-t Chassis (B906) 213 CDI (906.111, 906.113, 906.211,		**2009-16**
OM 651.955, OM 651.956, OM 651.957	95	129
Ch. N623655 - Ch. N671853, Before SCR catalytic converter, With SCR system		**68004**
Ch. N623655 - Ch. N661488, Particulate Filter		**68004**
05.2009 ->		**68018**
Before turbocharger, 327,3 mm.		**68027**
After catalytic converter, 1082.3 mm., Black		**68046**
Before soot particulate filter, With factory fitted soot -/particulate filter		**68071**
Sprinter 3-t Chassis (B906) 214 CDI (906.111, 906.113, 906.211,		**2016 ->**
OM 651.955, OM 651.956	105	143
Before soot particulate filter, With factory fitted soot -/particulate filter		**68071**
Sprinter 3-t Chassis (B906) 215 CDI (906.111, 906.113, 906.211,		**2006-09**
OM 646.986, OM 646.989, OM 646.990	110	150
PTC, 597,3 mm., Black		**68018**
Exhaust turbocharger, 257,3 mm.		**68031**
After catalytic converter, 1082.3 mm., Black		**68046**
Engine OM 646.990, Ch. S 471810 ->, Catalytic Converter		**68077**
Sprinter 3-t Chassis (B906) 216 CDI (906.111, 906.113, 906.211,		**2009 ->**
OM 651.955, OM 651.956, OM 651.957	120	163
Ch. N623655 - Ch. N661488, Particulate Filter		**68004**
Ch. N623655 - Ch. N671853, Before SCR catalytic converter, With SCR system		**68004**
07.2009 ->		**68018**
Before turbocharger, 327,3 mm.		**68027**
After catalytic converter, 1082.3 mm., Black		**68046**
Before soot particulate filter, With factory fitted soot -/particulate filter		**68071**
Sprinter 3-t Chassis (B906) 218 CDI (906.111, 906.113, 906.211,		**2006-09**
OM 642.896, OM 642.992, OM 642.993	135	184
EGR valve at manifold		**68012**
For soot particulate filter, Euro 3 (D4)		**68015**
Engine OM 642.896		**68018**
Exhaust turbocharger, 257,3 mm.		**68031**
After catalytic converter, 1082.3 mm., Black		**68046**

MERCEDES-BENZ Cont.

Sprinter 3-t Chassis (B906) 219 CDI / BlueTEC (906.111, 906.113,		**2009-16**
OM 642.896, OM 642.992	140	190
Ch. N623655 ->, Ch. E119193 ->, Before soot particulate filter		**68004**
Ch. N623655 - Ch. N671853, Before SCR catalytic converter, With SCR system		**68004**
EGR valve at manifold		**68012**
PTC, 597,3 mm., Black		**68018**
Sprinter 3-t Chassis (B910, B907) 211 CDI RWD (907.123, 907.221,		**2018 ->**
OM 651.958	84	114
Before soot particulate filter, With factory fitted soot -/particulate filter		**68071**
Sprinter 3-t Chassis (B910, B907) 214 CDI RWD (907.221, 907.223)		**2018 ->**
OM 651.958	105	143
Before soot particulate filter, With factory fitted soot -/particulate filter		**68071**
Sprinter 3-t Chassis (B910, B907) 216 CDI RWD (907.221, 907.223)		**2018 ->**
OM 651.958	120	163
Before soot particulate filter, With factory fitted soot -/particulate filter		**68071**
Sprinter 3-t Van (B906) 209 CDI (906.611, 906.613)		**2006-09**
OM 646.984	65	88
For soot particulate filter, Euro 3 (D4)		**68015**
Ch. A 424862 ->		**68018**
After catalytic converter, 1082.3 mm., Black		**68046**
Ch. S 471810 ->, Catalytic Converter		**68077**
Sprinter 3-t Van (B906) 210 CDI (906.611, 906.613)		**2009 ->**
OM 651.955, OM 651.956	70	95
Ch. P134932 ->, Particulate Filter		**68004**
Ch. P134932 - Ch. P269422, Before SCR catalytic converter, With SCR system		**68004**
PTC, 597,3 mm., Black		**68018**
Before turbocharger, 327,3 mm.		**68027**
Sprinter 3-t Van (B906) 211 CDI (906.611, 906.613)		**2006-09**
OM 646.985	80	109
For soot particulate filter, Euro 3 (D4)		**68015**
Ch. A 424862 ->		**68018**
Exhaust turbocharger, 257,3 mm.		**68031**
Ch. S 471810 ->, Catalytic Converter		**68077**
Sprinter 3-t Van (B906) 213 CDI (906.611, 906.613)		**2006-09**
OM 646.986	95	129
For soot particulate filter, Euro 3 (D4)		**68015**
Ch. A 424862 ->		**68018**
Before turbocharger, 327,3 mm.		**68027**
Sprinter 3-t Van (B906) 213 CDI (906.611, 906.613)		**2006 ->**
OM 651.955, OM 651.956, OM 651.957	95	129
Ch. P134932 - Ch. P269422, Particulate Filter		**68004**
Ch. P134932 - Ch. P269422, Before SCR catalytic converter, With SCR system		**68004**
PTC, 597,3 mm., Black		**68018**
Before turbocharger, 327,3 mm.		**68027**
Exhaust turbocharger, 257,3 mm.		**68031**
Sprinter 3-t Van (B906) 215 CDI (906.611, 906.613)		**2006-09**
OM 646.986, OM 646.989, OM 646.990	110	150
PTC, 597,3 mm., Black		**68018**
After catalytic converter, 1082.3 mm., Black		**68046**
Engine OM 646.990, Ch. S 471810 ->, Catalytic Converter		**68077**
Sprinter 3-t Van (B906) 216 CDI (906.611, 906.613)		**2009 ->**
OM 651.955, OM 651.956, OM 651.957	120	163
Ch. P134932 ->, Particulate Filter		**68004**
Ch. P134932 - Ch. P269422, Before SCR catalytic converter, With SCR system		**68004**
07.2009 ->		**68018**
Before turbocharger, 327,3 mm.		**68027**
Sprinter 3-t Van (B906) 218 CDI (906.611, 906.613)		**2006-09**
OM 642.896, OM 642.992	135	184
EGR valve at manifold		**68012**
For soot particulate filter, Euro 3 (D4)		**68015**
Engine OM 642.896, Ch. B 363350 ->		**68018**
Exhaust turbocharger, 257,3 mm.		**68031**
After catalytic converter, 1082.3 mm., Black		**68046**
Sprinter 3-t Van (B906) 219 CDI / BlueTEC (906.611, 906.613)		**2009 ->**
OM 642.896, OM 642.992	140	190
Ch. E124432 ->, Ch. P134932 ->, Before soot particulate filter		**68004**
Ch. P134932 - Ch. S765216, Before SCR catalytic converter, With SCR system		**68004**
EGR valve at manifold		**68012**
Engine OM 642.896, 07.2009 ->		**68018**
Exhaust turbocharger, 257,3 mm.		**68031**
After catalytic converter, 1082.3 mm., Black		**68046**
Sprinter 4,6-t Bus (B906) 415 CDI (906.753)		**2006 ->**
OM 651.955, OM 651.956, OM 651.957	110	150
Ch. S 471810 ->, Catalytic Converter		**68077**
Sprinter 4,6-t Chassis (B906) 411 CDI (906.153, 906.155, 906.253,		**2016 ->**
OM 651.955, OM 651.956	84	114
Before soot particulate filter, With factory fitted soot -/particulate filter		**68071**
Sprinter 4,6-t Chassis (B906) 411 CDI (906.153, 906.155, 906.253,		**2009-18**
OM 646.985	80	109
For soot particulate filter, Euro 3 (D4)		**68015**
-> 09.2011, Ch. S 471810 ->, Catalytic Converter		**68077**

MERCEDES-BENZ Cont.

Sprinter 4,6-t Chassis (B906) 413 CDI (906.153, 906.155, 906.253,			**2009 ->**
OM 651.955, OM 651.956, OM 651.957	95	129	
Ch. N623655 - Ch. N661488, Particulate Filter			**68004**
Ch. N623655 - Ch. N671853, Before SCR catalytic converter, With SCR system			**68004**
For soot particulate filter, Euro 3 (D4)			**68015**
Before soot particulate filter, With factory fitted soot -/particulate filter			**68071**
Sprinter 4,6-t Chassis (B906) 415 CDI (906.153, 906.155, 906.253,			**2006-09**
OM 646.986, OM 646.989, OM 646.990	110	150	
PTC, 597,3 mm., Black			**68018**
Exhaust turbocharger, 257,3 mm.			**68031**
After catalytic converter, 1082.3 mm., Black			**68046**
Engine OM 646.990, Ch. S 471810 ->, Catalytic Converter			**68077**
Sprinter 4,6-t Chassis (B906) 416 CDI (906.153, 906.155, 906.253,			**2009 ->**
OM 651.955, OM 651.956, OM 651.957	120	163	
Ch. N623655 - Ch. N671853, Before SCR catalytic converter, With SCR system			**68004**
Ch. N623655 - Ch. N661488, Particulate Filter			**68004**
Before turbocharger, 327,3 mm.			**68027**
Before soot particulate filter, With factory fitted soot -/particulate filter			**68071**
Sprinter 4,6-t Chassis (B906) 418 CDI (906.153, 906.155, 906.253,			**2006-09**
OM 642.896, OM 642.986, OM 642.992, OM 642.993	135	184	
EGR valve at manifold			**68012**
For soot particulate filter, Euro 3 (D4)			**68015**
Sprinter 4,6-t Chassis (B906) 419 CDI (906.153, 906.155, 906.253,			**2009 ->**
OM 642.896, OM 642.898, OM 642.986, OM 642.992	140	190	
Ch. E119193 ->, Ch. N623655 ->, Before soot particulate filter			**68004**
Ch. N623655 - Ch. N671853, Before SCR catalytic converter, With SCR system			**68004**
EGR valve at manifold			**68012**
PTC, 597,3 mm., Black			**68018**
Sprinter 4,6-t Van (B906) 411 CDI (906.653, 906.655, 906.657)			**2009-18**
OM 646.985	80	109	
For soot particulate filter, Euro 3 (D4)			**68015**
-> 09.2011, Ch. S 471810 ->, Catalytic Converter			**68077**
Sprinter 4,6-t Van (B906) 413 CDI (906.653, 906.655, 906.657)			**2006-16**
OM 651.955, OM 651.956, OM 651.957	95	129	
Ch. P134932 ->, Particulate Filter			**68004**
Ch. P134932 - Ch. P269422, Before SCR catalytic converter, With SCR system			**68004**
For soot particulate filter, Euro 3 (D4)			**68015**
Before soot particulate filter, With factory fitted soot -/particulate filter			**68071**
Sprinter 4,6-t Van (B906) 414 CDI (906.653, 906.655, 906.657)			**2016 ->**
OM 651.955, OM 651.956	105	143	
Before soot particulate filter, With factory fitted soot -/particulate filter			**68071**
Sprinter 4,6-t Van (B906) 414 CDI 4x4 (906.653, 906.655, 906.657)			**2016 ->**
OM 651.955, OM 651.956	105	143	
Before soot particulate filter, With factory fitted soot -/particulate filter			**68071**
Sprinter 4,6-t Van (B906) 415 CDI (906.653, 906.655, 906.657)			**2009-09**
OM 646.986, OM 646.989, OM 646.990	110	150	
Engine OM 646.990, Ch. S 471810 ->, Catalytic Converter			**68077**
Sprinter 4,6-t Van (B906) 416 CDI (906.653, 906.655, 906.657)			**2009 ->**
OM 651.955, OM 651.956, OM 651.957	120	163	
Ch. P134932 ->, Particulate Filter			**68004**
Ch. P134932 - Ch. P269422, Before SCR catalytic converter, With SCR system			**68004**
Before soot particulate filter, With factory fitted soot -/particulate filter			**68071**
Sprinter 4,6-t Van (B906) 416 CDI 4x4 (906.655, 906.657)			**2013 ->**
OM 651.955, OM 651.956, OM 651.957	120	163	
Before soot particulate filter, With factory fitted soot -/particulate filter			**68071**
Sprinter 4,6-t Van (B906) 418 CDI (906.653, 906.655, 906.657)			**2009-16**
OM 642.896, OM 642.986, OM 642.992	135	184	
EGR valve at manifold			**68012**
Sprinter 4,6-t Van (B906) 419 CDI (906.653, 906.655, 906.657)			**2009 ->**
OM 642.896, OM 642.992	140	190	
Ch. E124432 ->, Ch. P134932 ->, Before soot particulate filter			**68004**
Ch. P134932 - Ch. S765216, Before SCR catalytic converter, With SCR system			**68004**
EGR valve at manifold			**68012**
Sprinter 4-t Chassis (B907, B910) 411 CDI RWD (907.141, 907.143,			**2018 ->**
OM 651.958	84	114	
Before soot particulate filter, With factory fitted soot -/particulate filter			**68071**
Sprinter 4-t Chassis (B907, B910) 414 CDI A las 4 ruedas (907.143,			**2019 ->**
OM 651.958	105	143	
Before soot particulate filter, With factory fitted soot -/particulate filter			**68071**
Sprinter 4-t Chassis (B907, B910) 414 CDI RWD (907.143, 907.145,			**2018 ->**
OM 651.958	105	143	
Before soot particulate filter, With factory fitted soot -/particulate filter			**68071**
Sprinter 4-t Chassis (B907, B910) 416 CDI A las 4 ruedas (907.143,			**2019 ->**
OM 651.958	120	163	
Before soot particulate filter, With factory fitted soot -/particulate filter			**68071**
Sprinter 4-t Chassis (B907, B910) 416 CDI RWD (907.143, 907.145,			**2018 ->**
OM 651.958	120	163	
Before soot particulate filter, With factory fitted soot -/particulate filter			**68071**
Sprinter 4-t Van (B907, B910) 411 CDI RWD (907.643, 907.645)			**2018 ->**
OM 651.958	84	114	
Before soot particulate filter, With factory fitted soot -/particulate filter			**68071**
Sprinter 4-t Van (B907, B910) 414 CDI A las 4 ruedas (907.643,			**2019 ->**
OM 651.958	105	143	
Before soot particulate filter, With factory fitted soot -/particulate filter			**68071**

FAE

MERCEDES-BENZ Cont.

Sprinter 4-t Van (B907, B910) 414 CDI RWD (907.643, 907.645,			**2018 ->**
OM 651.958	105	143	
Before soot particulate filter, With factory fitted soot -/particulate filter			**68071**
Sprinter 4-t Van (B907, B910) 416 CDI A las 4 ruedas (907.643,			**2019 ->**
OM 651.958	120	163	
Before soot particulate filter, With factory fitted soot -/particulate filter			**68071**
Sprinter 4-t Van (B907, B910) 416 CDI RWD (907.643, 907.645,			**2018 ->**
OM 651.958	120	163	
Before soot particulate filter, With factory fitted soot -/particulate filter			**68071**
Sprinter 5-t Bus (B906) 513 CDI (906.655, 906.657)			**2009 ->**
OM 651.955	95	129	
Before soot particulate filter, With factory fitted soot -/particulate filter			**68071**
Sprinter 5-t Bus (B906) 515 CDI (906.655, 906.657)			**2006 ->**
OM 651.955, OM 651.956, OM 651.957	110	150	
Before soot particulate filter, With factory fitted soot -/particulate filter			**68071**
Sprinter 5-t Bus (B906) 516 CDI (906.655, 906.657)			**2009 ->**
OM 651.955, OM 651.956	120	163	
Before soot particulate filter, With factory fitted soot -/particulate filter			**68071**
Sprinter 5-t Chassis (B906) 509 CDI (906.153, 906.155, 906.253,			**2006-09**
OM 646.984	65	88	
For soot particulate filter, Euro 3 (D4)			**68015**
Ch. A 424862 ->			**68018**
Exhaust turbocharger, 257,3 mm.			**68031**
After catalytic converter, 1082.3 mm., Black			**68046**
Ch. S 471810 ->, Catalytic Converter			**68077**
Sprinter 5-t Chassis (B906) 510 CDI (906.153, 906.155, 906.253,			**2009 ->**
OM 651.955, OM 651.956	70	95	
Ch. N623655 - Ch. N661488, Particulate Filter			**68004**
Ch. N623655 - Ch. N671853, Before SCR catalytic converter, With SCR system			**68004**
PTC, 597,3 mm., Black			**68018**
Before turbocharger, 327,3 mm.			**68027**
Before soot particulate filter, With factory fitted soot -/particulate filter			**68071**
Sprinter 5-t Chassis (B906) 511 CDI (906.153, 906.155, 906.253,			**2016 ->**
OM 651.955, OM 651.956	84	114	
Before soot particulate filter, With factory fitted soot -/particulate filter			**68071**
Sprinter 5-t Chassis (B906) 511 CDI (906.153, 906.155, 906.253,			**2006-09**
OM 646.985	80	109	
For soot particulate filter, Euro 3 (D4)			**68015**
Ch. A 424862 ->			**68018**
Exhaust turbocharger, 257,3 mm.			**68031**
After catalytic converter, 1082.3 mm., Black			**68046**
Ch. S 471810 ->, Catalytic Converter			**68077**
Sprinter 5-t Chassis (B906) 511 CDI 4x4 (906.155, 906.253, 906.255)			**2006-09**
OM 646.985	80	109	
For soot particulate filter, Euro 3 (D4)			**68015**
Ch. S 471810 ->, Catalytic Converter			**68077**
Sprinter 5-t Chassis (B906) 513 CDI (906.155, 906.253, 906.255)			**2006-16**
OM 646.986	95	129	
For soot particulate filter, Euro 3 (D4)			**68015**
Sprinter 5-t Chassis (B906) 513 CDI (906.155, 906.253, 906.255,			**2006-16**
OM 651.955, OM 651.956, OM 651.957	95	129	
Ch. N623655 - Ch. N671853, Before SCR catalytic converter, With SCR system			**68004**
Ch. N623655 - Ch. N661488, Particulate Filter			**68004**
PTC, 597,3 mm., Black			**68018**
Before turbocharger, 327,3 mm.			**68027**
Before soot particulate filter, With factory fitted soot -/particulate filter			**68071**
Sprinter 5-t Chassis (B906) 513 CDI 4x4 (906.155, 906.253, 906.255,			**2011-16**
OM 651.955, OM 651.956, OM 651.957	95	129	
Ch. N623655 - Ch. N671853, Before SCR catalytic converter, With SCR system			**68004**
Ch. N623655 - Ch. N661488, Particulate Filter			**68004**
PTC, 597,3 mm., Black			**68018**
Before turbocharger, 327,3 mm.			**68027**
Before soot particulate filter, With factory fitted soot -/particulate filter			**68071**
Sprinter 5-t Chassis (B906) 514 CDI (906.153, 906.155, 906.253,			**2016 ->**
OM 651.955, OM 651.956	105	143	
Before soot particulate filter, With factory fitted soot -/particulate filter			**68071**
Sprinter 5-t Chassis (B906) 514 CDI 4x4 (906.153, 906.155, 906.253,			**2016 ->**
OM 651.955, OM 651.956	105	143	
Before soot particulate filter, With factory fitted soot -/particulate filter			**68071**
Sprinter 5-t Chassis (B906) 515 CDI (906.153, 906.155, 906.253,			**2006-09**
OM 646.986, OM 646.989, OM 646.990	110	150	
PTC, 597,3 mm., Black			**68018**
Exhaust turbocharger, 257,3 mm.			**68031**
After catalytic converter, 1082.3 mm., Black			**68046**
Engine OM 646.986, Ch. S 471810 ->, Catalytic Converter			**68077**
Sprinter 5-t Chassis (B906) 515 CDI 4x4 (906.153, 906.155, 906.253,			**2006-09**
OM 646.986, OM 646.989, OM 646.990	110	150	
PTC, 597,3 mm., Black			**68018**
Engine OM 646.990, Ch. S 471810 ->, Catalytic Converter			**68077**

MERCEDES-BENZ Cont.

Sprinter 5-t Chassis (B906) 516 CDI (906.153, 906.155, 906.253,		**2009 ->**
OM 651.955, OM 651.956, OM 651.957	120	163
Ch. N623655 - Ch. N671853, Before SCR catalytic converter, With SCR system		**68004**
Ch. N623655 - Ch. N661488, Particulate Filter		**68004**
PTC, 597,3 mm., Black		**68018**
Before turbocharger, 327,3 mm.		**68027**
Before soot particulate filter, With factory fitted soot -/particulate filter		**68071**
Sprinter 5-t Chassis (B906) 516 CDI 4x4 (906.153, 906.155, 906.255,		**2011 ->**
OM 651.955, OM 651.956, OM 651.957	120	163
Ch. N623655 - Ch. N671853, Before SCR catalytic converter, With SCR system		**68004**
Ch. N623655 - Ch. N661488, Particulate Filter		**68004**
PTC, 597,3 mm., Black		**68018**
Before turbocharger, 327,3 mm.		**68027**
Before soot particulate filter, With factory fitted soot -/particulate filter		**68071**
Sprinter 5-t Chassis (B906) 518 CDI (906.153, 906.155, 906.253,		**2006-09**
OM 642.896, OM 642.986, OM 642.992, OM 642.993	135	184
EGR valve at manifold		**68012**
For soot particulate filter, Euro 3 (D4)		**68015**
Engine OM 642.896, Ch. A 424862 ->		**68018**
Exhaust turbocharger, 257,3 mm.		**68031**
After catalytic converter, 1082.3 mm., Black		**68046**
Sprinter 5-t Chassis (B906) 518 CDI 4x4 (906.153, 906.155, 906.253,		**2006-09**
OM 642.896, OM 642.986, OM 642.992, OM 642.993	135	184
EGR valve at manifold		**68012**
For soot particulate filter, Euro 3 (D4)		**68015**
Sprinter 5-t Chassis (B906) 519 CDI / BlueTEC (906.153, 906.155,		**2009 ->**
OM 642.896, OM 642.898, OM 642.986, OM 642.992	140	190
Ch. E119193 ->, Ch. N623655 ->, Before soot particulate filter		**68004**
Ch. N623655 - Ch. N671853, Before SCR catalytic converter, With SCR system		**68004**
EGR valve at manifold		**68012**
PTC, 597,3 mm., Black		**68018**
Sprinter 5-t Chassis (B906) 519 CDI / BlueTEC 4x4 (906.153,		**2009 ->**
OM 642.896, OM 642.898, OM 642.986, OM 642.992	140	190
Ch. E119193 ->, Ch. N623655, Before soot particulate filter		**68004**
Ch. N623655 - Ch. N671853, Before SCR catalytic converter, With SCR system		**68004**
EGR valve at manifold		**68012**
PTC, 597,3 mm., Black		**68018**
Sprinter 5-t Chassis (B907) 511 CDI (907.153, 907.155, 907.253,		**2018 ->**
OM 651.958	84	114
Before soot particulate filter, With factory fitted soot -/particulate filter		**68071**
Sprinter 5-t Chassis (B907) 514 CDI (907.153, 907.155, 907.253,		**2018 ->**
OM 651.958	105	143
Before soot particulate filter, With factory fitted soot -/particulate filter		**68071**
Sprinter 5-t Chassis (B907) 516 CDI (907.153, 907.155, 907.253,		**2018 ->**
OM 651.958	120	163
Before soot particulate filter, With factory fitted soot -/particulate filter		**68071**
Sprinter 5-t Chassis (B907) 516 CDI A las 4 ruedas (907.153,		**2019 ->**
OM 651.958	120	163
Before soot particulate filter, With factory fitted soot -/particulate filter		**68071**
Sprinter 5-t Van (B906) 509 CDI (906.653, 906.655, 906.657)		**2006-09**
OM 646.984	65	88
For soot particulate filter, Euro 3 (D4)		**68015**
Ch. A 324554, F 401031 ->		**68018**
Exhaust turbocharger, 257,3 mm.		**68031**
After catalytic converter, 1082.3 mm., Black		**68046**
Ch. S 471810 ->, Catalytic Converter		**68077**
Sprinter 5-t Van (B906) 510 CDI (906.653, 906.655, 906.657)		**2009-16**
OM 651.955, OM 651.956	70	95
Ch. P134932 ->, Particulate Filter		**68004**
Ch. P134932 - Ch. P269422, Before SCR catalytic converter, With SCR system		**68004**
PTC, 597,3 mm., Black		**68018**
Before turbocharger, 327,3 mm.		**68027**
Before soot particulate filter, With factory fitted soot -/particulate filter		**68071**
Sprinter 5-t Van (B906) 511 CDI (906.653, 906.655, 906.657)		**2016 ->**
OM 651.955, OM 651.956	84	114
Before soot particulate filter, With factory fitted soot -/particulate filter		**68071**
Sprinter 5-t Van (B906) 511 CDI (906.653, 906.655, 906.657)		**2006-09**
OM 646.985	80	109
For soot particulate filter, Euro 3 (D4)		**68015**
Ch. A 324554, F 401031 ->		**68018**
Exhaust turbocharger, 257,3 mm.		**68031**
After catalytic converter, 1082.3 mm., Black		**68046**
Ch. S 471810 ->, Catalytic Converter		**68077**
Sprinter 5-t Van (B906) 511 CDI 4x4 (906.653, 906.655, 906.657)		**2006-09**
OM 646.985	80	109
For soot particulate filter, Euro 3 (D4)		**68015**
Ch. S 471810 ->, Catalytic Converter		**68077**
Sprinter 5-t Van (B906) 513 CDI (906.653, 906.655, 906.657)		**2006 ->**
OM 646.986	95	129
For soot particulate filter, Euro 3 (D4)		**68015**
PTC, 597,3 mm., Black		**68018**

FAE

MERCEDES-BENZ Cont.

Sprinter 5-t Van (B906) 513 CDI (906.653, 906.655, 906.657)		**2006 ->**
OM 651.955, OM 651.956, OM 651.957	95	129
Ch. P134932 - Ch. P269422, Before SCR catalytic converter, With SCR system		**68004**
Ch. P134932 ->, Particulate Filter		**68004**
Ch. A 324554 ->		**68018**
Before turbocharger, 327,3 mm.		**68027**
Before soot particulate filter, With factory fitted soot -/particulate filter		**68071**
Sprinter 5-t Van (B906) 513 CDI 4x4 (906.653, 906.655, 906.657)		**2006 ->**
OM 651.955, OM 651.956, OM 651.957	95	129
Ch. P134932 ->, Particulate Filter		**68004**
Ch. P134932 - Ch. P269422, Before SCR catalytic converter, With SCR system		**68004**
PTC, 597,3 mm., Black		**68018**
Before turbocharger, 327,3 mm.		**68027**
Before soot particulate filter, With factory fitted soot -/particulate filter		**68071**
Sprinter 5-t Van (B906) 514 CDI (906.653, 906.655, 906.657)		**2016 ->**
OM 651.955, OM 651.956	105	143
Before soot particulate filter, With factory fitted soot -/particulate filter		**68071**
Sprinter 5-t Van (B906) 514 CDI 4x4 (906.653, 906.655, 906.657)		**2016 ->**
OM 651.955, OM 651.956	105	143
Before soot particulate filter, With factory fitted soot -/particulate filter		**68071**
Sprinter 5-t Van (B906) 515 CDI (906.653, 906.655, 906.657)		**2006-09**
OM 646.986, OM 646.989, OM 646.990	110	150
PTC, 597,3 mm., Black		**68018**
After catalytic converter, 1082.3 mm., Black		**68046**
Engine OM 646.986, Ch. S 471810 ->, Catalytic Converter		**68077**
Sprinter 5-t Van (B906) 515 CDI 4x4 (906.653, 906.655, 906.657)		**2006-09**
OM 646.986, OM 646.989, OM 646.990	110	150
PTC, 597,3 mm., Black		**68018**
Engine OM 646.990, Ch. S 471810 ->, Catalytic Converter		**68077**
Sprinter 5-t Van (B906) 516 CDI (906.653, 906.655, 906.657)		**2009 ->**
OM 651.955, OM 651.956, OM 651.957	120	163
Ch. P134932 ->, Particulate Filter		**68004**
Ch. P134932 - Ch. P269422, Before SCR catalytic converter, With SCR system		**68004**
PTC, 597,3 mm., Black		**68018**
Before turbocharger, 327,3 mm.		**68027**
Before soot particulate filter, With factory fitted soot -/particulate filter		**68071**
Sprinter 5-t Van (B906) 516 CDI 4x4 (906.653, 906.655, 906.657)		**2006 ->**
OM 651.955, OM 651.956, OM 651.957	120	163
Ch. P134932 ->, Particulate Filter		**68004**
Ch. P134932 - Ch. P269422, Before SCR catalytic converter, With SCR system		**68004**
PTC, 597,3 mm., Black		**68018**
Before turbocharger, 327,3 mm.		**68027**
Before soot particulate filter, With factory fitted soot -/particulate filter		**68071**
Sprinter 5-t Van (B906) 518 CDI (906.653, 906.655, 906.657)		**2006-09**
OM 642.896, OM 642.986, OM 642.992, OM 642.993	135	184
EGR valve at manifold		**68012**
For soot particulate filter, Euro 3 (D4)		**68015**
Engine OM 642.896, Ch. A 324554, F 401031 ->		**68018**
Exhaust turbocharger, 257,3 mm.		**68031**
After catalytic converter, 1082.3 mm., Black		**68046**
Sprinter 5-t Van (B906) 518 CDI 4x4 (906.653, 906.655, 906.657)		**2006-09**
OM 642.896, OM 642.986, OM 642.992, OM 642.993	135	184
EGR valve at manifold		**68012**
For soot particulate filter, Euro 3 (D4)		**68015**
Sprinter 5-t Van (B906) 519 CDI / BlueTEC (906.653, 906.655,		**2009 ->**
OM 642.896, OM 642.898, OM 642.986, OM 642.992	140	190
Ch. E124432 ->, Ch. P134932 ->, Before soot particulate filter		**68004**
Ch. P134932 - Ch. S765216, Before SCR catalytic converter, With SCR system		**68004**
EGR valve at manifold		**68012**
PTC, 597,3 mm., Black		**68018**
Sprinter 5-t Van (B906) 519 CDI / BlueTEC 4x4 (906.653, 906.655,		**2009 ->**
OM 642.896, OM 642.898, OM 642.986, OM 642.992	140	190
Ch.P134932->, Ch.S765216->, Before SCR catalytic converter, With SCR system		**68004**
Ch. E124432 ->, Ch. P134932 ->, Before soot particulate filter		**68004**
EGR valve at manifold		**68012**
Ch. A 424862 ->		**68018**
Sprinter 5-t Van (B907) 511 CDI (907.653, 907.655, 907.657)		**2018 ->**
OM 651.958	84	114
Before soot particulate filter, With factory fitted soot -/particulate filter		**68071**
Sprinter 5-t Van (B907) 514 CDI (907.653, 907.655, 907.657)		**2018 ->**
OM 651.958	105	143
Before soot particulate filter, With factory fitted soot -/particulate filter		**68071**
Sprinter 5-t Van (B907) 516 CDI (907.653, 907.655, 907.657)		**2018 ->**
OM 651.958	120	163
Before soot particulate filter, With factory fitted soot -/particulate filter		**68071**
Sprinter 5-t Van (B907) 516 CDI A las 4 ruedas (907.653, 907.655,		**2019 ->**
OM 651.958	120	163
Before soot particulate filter, With factory fitted soot -/particulate filter		**68071**
Sprinter Classic 3,5-t Van (B909) 311 CDI (909.632, 909.633)		**2013 ->**
OM 646.701	80	109
Ch. B111651 ->, Euro 4 (D4), Before catalytic converter		**68004**
Before catalytic converter		**68094**

MERCEDES-BENZ Cont.

Sprinter Classic 4,6-t Bus (B909) 411 CDI (909.843)		**2013 ->**
OM 646.701	80	109
Ch. B111651 ->, Euro 4 (D4), Before catalytic converter		**68004**
Before catalytic converter		**68094**
Viano (W639) CDI 2.0 (639.711, 639.713, 639.811, 639.813, 639.815)		**2003 ->**
OM 646.982	80	109
Engine OM 646.982, Before soot particulate filter		**68015**
With factory fitted soot -/particulate filter, Exhaust Manifold, Z 522.630		**68023**
Viano (W639) CDI 2.0 (639.711, 639.713, 639.811, 639.813, 639.815)		**2005 ->**
OM 646.982	85	116
Before soot particulate filter		**68015**
With factory fitted soot -/particulate filter, Exhaust Manifold, Z 522.630		**68023**
Viano (W639) CDI 2.0 4-matic (639.711, 639.713, 639.811, 639.813,...		**2006 ->**
OM 646.982	85	116
With factory fitted soot -/particulate filter, Exhaust Manifold, 427,3 mm.		**68023**
Viano (W639) CDI 2.0 4-matic (639.713)		**2005 ->**
OM 646.982	80	109
Before soot particulate filter		**68015**
With factory fitted soot -/particulate filter, Exhaust Manifold, Z 522.630		**68023**
Viano (W639) CDI 2.2 (639.711, 639.713, 639.811, 639.813, 639.815)		**2003 ->**
OM 646.980, OM 646.982	110	150
Engine OM 646.982, OM 646.980, 07.2005 ->, Before soot particulate filter		**68015**
With factory fitted soot -/particulate filter, Exhaust Manifold, Z 522.630		**68023**
Viano (W639) CDI 2.2 (639.811, 639.813, 639.815, 639.711, 639.713)		**2010 ->**
OM 651.940	100	136
Before turbocharger, 327,3 mm.		**68027**
Engine OM 651.940, Before soot particulate filter		**68060**
Viano (W639) CDI 2.2 (639.811, 639.813, 639.815, 639.711, 639.713)		**2010 ->**
OM 651.940	120	163
Before turbocharger, 327,3 mm.		**68027**
Engine OM 651.940, Before soot particulate filter		**68060**
Viano (W639) CDI 2.2 4-matic (639.711, 639.713, 639.811, 639.813,...		**2005 ->**
OM 646.982	110	150
Before soot particulate filter		**68015**
With factory fitted soot -/particulate filter, Exhaust Manifold, Z 522.630		**68023**
Viano (W639) CDI 2.2 4-matic (639.811, 639.813, 639.815, 639.711,...		**2010 ->**
OM 651.940	100	136
Before turbocharger, 327,3 mm.		**68027**
Engine OM 651.940, Before soot particulate filter		**68060**
Viano (W639) CDI 2.2 4-matic (639.811, 639.813, 639.815, 639.711,...		**2010 ->**
OM 651.940	120	163
Before turbocharger, 327,3 mm.		**68027**
Engine OM 651.940, Before soot particulate filter		**68060**
Viano (W639) CDI 3.0 (639.811, 639.813, 639.815)		**2006 ->**
OM 642.990	150	204
Before soot particulate filter		**68015**
Engine OM 642.990, Catalytic Converter, With diesel soot filter		**68039**
Viano (W639) CDI 3.0 (639.811, 639.813, 639.815)		**2010 ->**
OM 642.890	165	224
Engine OM 642.890, Before soot particulate filter		**68060**
Vito / Mixto Van (W639) 109 CDI (639.601, 639.603, 639.605)		**2003 ->**
OM 646.983	65	88
Before soot particulate filter		**68015**
Vito / Mixto Van (W639) 109 CDI (639.601, 639.603, 639.605)		**2006 ->**
OM 646.980, OM 646.981	70	95
Before soot particulate filter		**68015**
With factory fitted soot -/particulate filter, Exhaust Manifold, Z 522.630		**68023**
Vito / Mixto Van (W639) 110 CDI (639.601, 639.603, 639.605)		**2010 ->**
OM 651.940	70	95
Before turbocharger, 327,3 mm.		**68027**
Engine OM 651.940, Before soot particulate filter		**68060**
Vito / Mixto Van (W639) 111 CDI (639.601, 639.603)		**2007 ->**
OM 646.980, OM 646.982	85	116
Before soot particulate filter		**68015**
With factory fitted soot -/particulate filter, Exhaust Manifold, Z 522.630		**68023**
Vito / Mixto Van (W639) 111 CDI (639.601, 639.603, 639.605)		**2003 ->**
OM 646.982	80	109
Engine OM 646.982, Before soot particulate filter		**68015**
With factory fitted soot -/particulate filter, Exhaust Manifold, Z 522.630		**68023**
Vito / Mixto Van (W639) 111 CDI 4x4 (639.601, 639.603, 639.605)		**2007 ->**
OM 646.982	80	109
Before soot particulate filter		**68015**
With factory fitted soot -/particulate filter, Exhaust Manifold, Z 522.630		**68023**
Vito / Mixto Van (W639) 113 CDI (639.601, 639.603, 639.605)		**2010 ->**
OM 651.940	100	136
Before turbocharger, 327,3 mm.		**68027**
Engine OM 651.940, Before soot particulate filter		**68060**
Vito / Mixto Van (W639) 113 CDI 4x4 (639.601, 639.603, 639.605)		**2010 ->**
OM 651.940	100	136
Before turbocharger, 327,3 mm.		**68027**
Engine OM 651.940, Before soot particulate filter		**68060**

FAE

MERCEDES-BENZ Cont.

Vito / Mixto Van (W639) 115 CDI (639.601, 639.603, 639.605)		**2003 ->**
OM 646.980, OM 646.982	110	150
Engine OM 646.982, Engine OM 646.980, Before soot particulate filter		**68015**
With factory fitted soot -/particulate filter, Exhaust Manifold, Z 522.630		**68023**
Vito / Mixto Van (W639) 115 CDI 4x4 (639.601, 639.603, 639.605)		**2006 ->**
OM 646.982	110	150
Before soot particulate filter		**68015**
With factory fitted soot -/particulate filter, Exhaust Manifold, Z 522.630		**68023**
Vito / Mixto Van (W639) 116 CDI (639.601, 639.603, 639.605)		**2010 ->**
OM 651.940	120	163
Before turbocharger, 327,3 mm.		**68027**
Engine OM 651.940, Before soot particulate filter		**68060**
Vito / Mixto Van (W639) 116 CDI 4x4 (639.601, 639.603, 639.605)		**2010 ->**
OM 651.940	120	163
Before turbocharger, 327,3 mm.		**68027**
Engine OM 651.940, Before soot particulate filter		**68060**
Vito / Mixto Van (W639) 120 CDI (639.601, 639.603, 639.605)		**2006 ->**
OM 642.990	150	204
Before soot particulate filter		**68015**
Engine OM 642.990, Catalytic Converter, With diesel soot filter		**68039**
Vito / Mixto Van (W639) 122 CDI (639.601, 639.603, 639.605)		**2010 ->**
OM 642.890	165	224
Engine OM 642.890, Before soot particulate filter		**68060**
Vito Bus (W639) 109 CDI (639.701)		**2003 ->**
OM 646.983	65	88
Before soot particulate filter		**68015**
Vito Bus (W639) 109 CDI (639.701, 639.703)		**2006 ->**
OM 646.980	70	95
Before soot particulate filter		**68015**
With factory fitted soot -/particulate filter, Exhaust Manifold, Z 522.630		**68023**
Vito Bus (W639) 109 CDI 4x4 (639.701)		**2007-14**
OM 646.981	70	95
Before soot particulate filter		**68015**
Vito Bus (W639) 110 CDI (639.701, 639.703, 639.705)		**2010-14**
OM 651.940	70	95
Before turbocharger, 327,3 mm.		**68027**
Engine OM 651.940, Before soot particulate filter		**68060**
Vito Bus (W639) 111 CDI (639.701, 639.703, 639.705)		**2003 ->**
OM 646.982	80	109
Engine OM 646.982, Before soot particulate filter		**68015**
With factory fitted soot -/particulate filter, Exhaust Manifold, Z 522.630		**68023**
Vito Bus (W639) 111 CDI (639.701, 639.703, 639.705)		**2007 ->**
OM 646.980	85	116
Before soot particulate filter		**68015**
With factory fitted soot -/particulate filter, Exhaust Manifold, Z 522.630		**68023**
Vito Bus (W639) 111 CDI 4x4 (639.701, 639.703, 639.705)		**2007-14**
OM 646.982	80	109
Before soot particulate filter		**68015**
With factory fitted soot -/particulate filter, Exhaust Manifold, Z 522.630		**68023**
Vito Bus (W639) 113 CDI (639.701, 639.703, 639.705)		**2010 ->**
OM 651.940	100	136
Before turbocharger, 327,3 mm.		**68027**
Engine OM 651.940, Before soot particulate filter		**68060**
Vito Bus (W639) 113 CDI 4x4 (639.701, 639.703, 639.705)		**2010-14**
OM 651.940	100	136
Before turbocharger, 327,3 mm.		**68027**
Engine OM 651.940		**68060**
Vito Bus (W639) 115 CDI (639.701, 639.703, 639.705)		**2003 ->**
OM 646.980, OM 646.982	110	150
Engine OM 646.980, Engine OM 646.982, Before soot particulate filter		**68015**
With factory fitted soot -/particulate filter, Exhaust Manifold, Z 522.630		**68023**
Vito Bus (W639) 115 CDI 4x4 (639.701, 639.705)		**2007-14**
OM 646.982	110	150
Before soot particulate filter		**68015**
With factory fitted soot -/particulate filter, Exhaust Manifold, Z 522.630		**68023**
Vito Bus (W639) 116 CDI (639.701, 639.703, 639.705)		**2010 ->**
OM 651.940	120	163
Before turbocharger, 327,3 mm.		**68027**
Engine OM 651.940, After catalytic converter		**68060**
Vito Bus (W639) 116 CDI 4x4 (639.701, 639.703, 639.705)		**2010-14**
OM 651.940	120	163
Before turbocharger, 327,3 mm.		**68027**
Engine OM 651.940, Before soot particulate filter		**68060**
Vito Bus (W639) 120 CDI (639.701, 639.703, 639.705)		**2006 ->**
OM 642.990	150	204
Before soot particulate filter		**68015**
Engine OM 642.990, Catalytic Converter, With diesel soot filter		**68039**
Vito Bus (W639) 122 CDI (639.701, 639.703, 639.705)		**2010 ->**
OM 642.890	165	224
Engine OM 642.890, Before soot particulate filter		**68060**

MERCEDES-BENZ Cont.

Vito Mixto (Double Cabin) (W447) 114 CDI (447.701, 447.703,			**2014 ->**
OM 651.950	100	136	
Before turbocharger, 327,3 mm.			**68027**
PTC, 347,3 mm.			**68029**
Engine OM 651.950, From Euro 5, After catalytic converter, L.H.D.			**68060**
Vito Mixto (Double Cabin) (W447) 114 CDI 4-matic (447.701,			**2015 ->**
OM 651.950	100	136	
Engine OM 651.950, From Euro 5, After catalytic converter, L.H.D.			**68060**
Vito Mixto (Double Cabin) (W447) 116 CDI (447.701, 447.703,			**2014 ->**
OM 651.950	120	163	
Before turbocharger, 327,3 mm.			**68027**
PTC, 347,3 mm.			**68029**
Engine OM 651.950, From Euro 5, After catalytic converter, L.H.D.			**68060**
Vito Mixto (Double Cabin) (W447) 116 CDI 4-matic (447.701,			**2015 ->**
OM 651.950	120	163	
Engine OM 651.950, From Euro 5, After catalytic converter, L.H.D.			**68060**
Vito Mixto (Double Cabin) (W447) 119 BlueTEC (447.701, 447.703,			**2014 ->**
OM 651.950	140	190	
Before turbocharger, 327,3 mm.			**68027**
PTC, 347,3 mm.			**68029**
Engine OM 651.950, From Euro 5, After catalytic converter, L.H.D.			**68060**
Vito Mixto (Double Cabin) (W447) 119 BlueTEC 4-matic (447.701,			**2014 ->**
OM 651.950	140	190	
Before turbocharger, 327,3 mm.			**68027**
Engine OM 651.950, From Euro 5, After catalytic converter, L.H.D.			**68060**
Vito Tourer (W447) 114 CDI / 114 BlueTEC (447.701, 447.703,			**2014 ->**
OM 651.950	100	136	
Before turbocharger, 327,3 mm.			**68027**
PTC, 347,3 mm.			**68029**
Engine OM 651.950, From Euro 5, After catalytic converter, L.H.D.			**68060**
Vito Tourer (W447) 114 CDI / 114 BlueTEC 4-matic (447.701,			**2015 ->**
OM 651.950	100	136	
Engine OM 651.950, From Euro 5, After catalytic converter, L.H.D.			**68060**
Vito Tourer (W447) 116 CDI / 116 BlueTEC (447.701, 447.703,			**2014 ->**
OM 651.950	120	163	
Before turbocharger, 327,3 mm.			**68027**
PTC, 347,3 mm.			**68029**
Engine OM 651.950, From Euro 5, After catalytic converter, L.H.D.			**68060**
Vito Tourer (W447) 116 CDI / 116 BlueTEC 4-matic (447.701,			**2015 ->**
OM 651.950	120	163	
Engine OM 651.950, From Euro 5, After catalytic converter, L.H.D.			**68060**
Vito Tourer (W447) 119 CDI / 119 BlueTEC (447.701, 447.703,			**2014 ->**
OM 651.950	140	190	
Before turbocharger, 327,3 mm.			**68027**
PTC, 347,3 mm.			**68029**
Engine OM 651.950, From Euro 5, After catalytic converter, L.H.D.			**68060**
Vito Tourer (W447) 119 CDI / 119 BlueTEC 4-matic (447.701,			**2014 ->**
OM 651.950	140	190	
Before turbocharger, 327,3 mm.			**68027**
Engine OM 651.950, From Euro 5, After catalytic converter, L.H.D.			**68060**
Vito Van (W447) 114 CDI (447.601, 447.603, 447.605)			**2014 ->**
OM 651.950	100	136	
Before turbocharger, 327,3 mm.			**68027**
PTC, 347,3 mm.			**68029**
Engine OM 651.950, From Euro 5, After catalytic converter, L.H.D.			**68060**
Vito Van (W447) 114 CDI 4x4 (447.601, 447.603, 447.605)			**2015 ->**
OM 651.950	100	136	
Engine OM 651.950, From Euro 5, After catalytic converter, L.H.D.			**68060**
Vito Van (W447) 116 CDI (447.601, 447.603, 447.605)			**2014 ->**
OM 651.950	120	163	
Before turbocharger, 327,3 mm.			**68027**
PTC, 347,3 mm.			**68029**
Engine OM 651.950, From Euro 5, After catalytic converter, L.H.D.			**68060**
Vito Van (W447) 116 CDI 4x4 (447.601, 447.603, 447.605)			**2015 ->**
OM 651.950	120	163	
Engine OM 651.950, From Euro 5, After catalytic converter, L.H.D.			**68060**
Vito Van (W447) 119 CDI / BlueTEC (447.601, 447.603, 447.605)			**2014 ->**
OM 651.950	140	190	
PTC, 347,3 mm.			**68029**
Engine OM 651.950, From Euro 5, After catalytic converter, L.H.D.			**68060**
Vito Van (W447) 119 CDI / BlueTEC 4x4 (447.601, 447.603, 447.605)			**2015 ->**
OM 651.950	140	190	
Engine OM 651.950, From Euro 5, After catalytic converter, L.H.D.			**68060**

OPEL

Astra H (A04) 1.7 CDTI (L48)			**2007-14**
A 17 DTJ, Z 17 DTJ	81	110	
Engine A 17 DTJ, After catalytic converter			**68123**
Astra H (A04) 1.7 CDTI (L48)			**2007-14**
A 17 DTR, Z 17 DTR	92	125	
Engine A 17 DTR, After catalytic converter			**68123**

OPEL Cont.

Astra H (A04) 1.9 CDTI (L48)			**2004-10**
Z 19 DTH	110	150	
After catalytic converter, 275,2 mm., Black			**68047**
Before soot particulate filter, 1505,2 mm., Black			**68088**
Astra H (A04) 1.9 CDTI (L48)			**2004-10**
Z 19 DT	88	120	
After catalytic converter, 275,2 mm., Black			**68047**
Before soot particulate filter, 1505,2 mm., Black			**68088**
Astra H (A04) 1.9 CDTI (L48)			**2005-10**
Z 19 DTL	74	100	
After catalytic converter, 275,2 mm., Black			**68047**
Before soot particulate filter, 1505,2 mm., Black			**68088**
Astra H (A04) 1.9 CDTI 16V (L48)			**2004-10**
Z 19 DTJ	88	120	
After catalytic converter, 275,2 mm., Black			**68047**
Before soot particulate filter, 1505,2 mm., Black			**68088**
Astra H Estate (A04) 1.7 CDTI (L35)			**2007-14**
A 17 DTJ, Z 17 DTJ	81	110	
Engine A 17 DTJ, -> 10.2010, After catalytic converter			**68123**
Astra H Estate (A04) 1.7 CDTI (L35)			**2007-14**
A 17 DTR, Z 17 DTR	92	125	
Engine A 17 DTR, -> 10.2010, After catalytic converter			**68123**
Astra H Estate (A04) 1.9 CDTI (L35)			**2004-10**
Z 19 DTH	110	150	
After catalytic converter, 275,2 mm., Black			**68047**
Before soot particulate filter, 1505,2 mm., Black			**68088**
Astra H Estate (A04) 1.9 CDTI (L35)			**2005-10**
Z 19 DT	88	120	
After catalytic converter, 275,2 mm., Black			**68047**
Before soot particulate filter, 1505,2 mm., Black			**68088**
Astra H Estate (A04) 1.9 CDTI (L35)			**2005-10**
Z 19 DTL	74	100	
After catalytic converter, 275,2 mm., Black			**68047**
Before soot particulate filter, 1505,2 mm., Black			**68088**
Astra H Estate (A04) 1.9 CDTI 16V (L35)			**2004-10**
Z 19 DTJ	88	120	
After catalytic converter, 275,2 mm., Black			**68047**
Before soot particulate filter, 1505,2 mm., Black			**68088**
Astra H GTC (A04) 1.7 CDTI (L08)			**2007-10**
A 17 DTJ, Z 17 DTJ	81	110	
After catalytic converter, 1155.2 mm., Black			**68123**
Astra H GTC (A04) 1.7 CDTI (L08)			**2007-10**
A 17 DTR, Z 17 DTR	92	125	
After catalytic converter, 1155.2 mm., Black			**68123**
Astra H GTC (A04) 1.9 CDTi (L08)			**2005-10**
Z 19 DTH	110	150	
After catalytic converter, 275,2 mm., Black			**68047**
Before soot particulate filter, 1505,2 mm., Black			**68088**
Astra H GTC (A04) 1.9 CDTI (L08)			**2006-10**
Z 19 DTL	74	101	
After catalytic converter, 275,2 mm., Black			**68047**
Before soot particulate filter, 1505,2 mm., Black			**68088**
Astra H GTC (A04) 1.9 CDTI (L08)			**2005-10**
Z 19 DT	88	120	
After catalytic converter, 275,2 mm., Black			**68047**
Before soot particulate filter, 1505,2 mm., Black			**68088**
Astra H GTC (A04) 1.9 CDTi 16V (L08)			**2005-10**
Z 19 DTJ	88	120	
After catalytic converter, 275,2 mm., Black			**68047**
Before soot particulate filter, 1505,2 mm., Black			**68088**
Astra H Twintop (A04) 1.9 CDTi (L67)			**2005-10**
Z 19 DTH	110	150	
After catalytic converter, 275,2 mm., Black			**68047**
Before soot particulate filter, 1505,2 mm., Black			**68088**
Astra H Van/Estate (L70) 1.7 CDTI (L70)			**2007-10**
A 17 DTJ, Z 17 DTJ	81	110	
Engine A 17 DTJ, After catalytic converter			**68123**
Astra H Van/Estate (L70) 1.7 CDTI (L70)			**2007-10**
A 17 DTR, Z 17 DTR	92	125	
Engine A 17 DTR, After catalytic converter			**68123**
Astra H Van/Estate (L70) 1.9 CDTI (L70)			**2004-10**
Z 19 DTH	110	150	
After catalytic converter, 275,2 mm., Black			**68047**
Before soot particulate filter, 1505,2 mm., Black			**68088**
Astra H Van/Estate (L70) 1.9 CDTI (L70)			**2005-10**
Z 19 DT	88	120	
After catalytic converter, 275,2 mm., Black			**68047**
Before soot particulate filter, 1505,2 mm., Black			**68088**
Astra H Van/Estate (L70) 1.9 CDTI 16V (L70)			**2004-10**
Z 19 DTJ	88	120	
After catalytic converter, 275,2 mm., Black			**68047**
Before soot particulate filter, 1505,2 mm., Black			**68088**

OPEL Cont.

Astra J (P10) 1.3 CDTI (68)			**2009-15**
A 13 DTE	70	95	
Before catalytic converter, 215.2 mm., Black			**68069**
Astra J (P10) 1.7 CDTI (68)			**2011-15**
A 17 DTF, A 17 DTS	96	131	
Before catalytic converter, 385 mm., Black			**68096**
Astra J (P10) 1.7 CDTI (68)			**2009-15**
A 17 DTC, A 17 DTE, A 17 DTJ	81	110	
Engine A 17 DTC, Engine A 17 DTE, Before catalytic converter			**68096**
Astra J (P10) 2.0 CDTI (68)			**2011-15**
A 20 DTH	121	165	
Before particulate filter, 225,2 mm., Black			**68091**
Astra J (P10) 2.0 CDTI (68)			**2009-15**
A 20 DTH	118	160	
Before particulate filter, 225,2 mm., Black			**68091**
Astra J GTC 1.7 CDTI (08)			**2011-15**
A 17 DTC, A 17 DTE, A 17 DTJ	81	110	
Engine A 17 DTE, Engine A 17 DTC, Before catalytic converter			**68096**
Astra J GTC 1.7 CDTI (08)			**2011-15**
A 17 DTF, A 17 DTS	96	131	
Before catalytic converter, 385 mm., Black			**68096**
Astra J GTC 2.0 CDTI (08)			**2011-15**
A 20 DTH	121	165	
Before particulate filter, 225,2 mm., Black			**68091**
Astra J Sedan 1.3 CDTI (69)			**2012-15**
A 13 DTE	70	95	
Before catalytic converter, 215.2 mm., Black			**68069**
Astra J Sedan 1.7 CDTI (69)			**2012-15**
A 17 DTC, A 17 DTE, A 17 DTJ	81	110	
Engine A 17 DTC, Engine A 17 DTE, Before catalytic converter			**68096**
Astra J Sedan 1.7 CDTI (69)			**2012-15**
A 17 DTF, A 17 DTS	96	131	
Before catalytic converter, 385 mm., Black			**68096**
Astra J Sports Tourer (P10) 1.7 CDTI (35)			**2010-15**
A 17 DTF, A 17 DTS	96	131	
Before catalytic converter, 385 mm., Black			**68096**
Astra J Sports Tourer (P10) 1.7 CDTI (35)			**2010-15**
A 17 DTC, A 17 DTE, A 17 DTJ	81	110	
Engine A 17 DTE, Engine A 17 DTC, Before catalytic converter			**68096**
Astra J Sports Tourer (P10) 2.0 CDTI (35)			**2010-15**
A 20 DTH	118	160	
Before particulate filter, 225,2 mm., Black			**68091**
Astra J Sports Tourer (P10) 2.0 CDTI (35)			**2011-15**
A 20 DTH	121	165	
Before particulate filter, 225,2 mm., Black			**68091**
Cascada (W13) 2.0 CDTI (67)			**2013-15**
A 20 DTH	121	165	
Before particulate filter, 225,2 mm., Black			**68091**
Corsa D (S07) 1.3 CDTI (L08, L68)			**2006-14**
A 13 DTC, Z 13 DTJ	55	75	
Before catalytic converter, 215.2 mm., Black			**68069**
Corsa D (S07) 1.3 CDTI (L08, L68)			**2009-14**
A 13 DTE, A 13 DTR, Z 13 DTE	70	95	
Before catalytic converter, 215.2 mm., Black			**68069**
Corsa D Van (S07) 1.3 CDTI (L08)			**2006-14**
A 13 DTC, Z 13 DTJ	55	75	
Before catalytic converter, Ch. 4085758 ->			**68069**
Corsa D Van (S07) 1.3 CDTI (L08)			**2009-14**
A 13 DTE, A 13 DTR, Z 13 DTE	70	95	
Before catalytic converter, 215.2 mm., Black			**68069**
Insignia A (G09) 2.0 CDTI (68)			**2013-17**
A 20 DTE	103	140	
Rear			**68082**
Before particulate filter, 225,2 mm., Black			**68091**
Insignia A (G09) 2.0 CDTI (68)			**2013-17**
A 20 DTH	120	163	
Rear			**68082**
Before particulate filter, 225,2 mm., Black			**68091**
Insignia A (G09) 2.0 CDTI (68)			**2008-17**
A 20 DTC, A 20 DTL	81	110	
Rear			**68082**
Before particulate filter, 225,2 mm., Black			**68091**
Insignia A (G09) 2.0 CDTI (68)			**2008-17**
A 20 DT, A 20 DTJ	96	131	
Rear			**68082**
Engine A 20 DT			**68091**
Insignia A (G09) 2.0 CDTI (68)			**2008-17**
A 20 DTH	118	160	
09.2008 ->, Rear			**68082**
Before particulate filter, 225,2 mm., Black			**68091**
Insignia A (G09) 2.0 CDTI (68)			**2012-17**
A 20 DTE	88	120	
Rear			**68082**
Before particulate filter, 225,2 mm., Black			**68091**

FAE

OPEL Cont.

Insignia A (G09) 2.0 CDTI 4x4 (68)			**2013-17**
A 20 DTH	120	163	
Rear			**68082**
Before particulate filter, 225,2 mm., Black			**68091**
Insignia A (G09) 2.0 CDTI 4x4 (68)			**2010-17**
A 20 DTH	118	160	
Rear			**68082**
Before particulate filter, 225,2 mm., Black			**68091**
Insignia A Country Tourer (G09) 2.0 CDTi (47)			**2014-17**
A 20 DTH	120	163	
Rear			**68082**
Insignia A Country Tourer (G09) 2.0 CDTi (47)			**2008-17**
A 20 DT, A 20 DTJ	96	131	
02.2009 ->, Rear			**68082**
Insignia A Country Tourer (G09) 2.0 CDTi (47)			**2012-17**
A 20 DTE	88	120	
09.2013 ->, Rear			**68082**
Insignia A Country Tourer (G09) 2.0 CDTi 4x4 (47)			**2013-17**
A 20 DTH	120	163	
Rear			**68082**
Insignia A Sedan (G09) 2.0 CDTI (69)			**2013-17**
A 20 DTE	103	140	
Rear			**68082**
Before particulate filter, 225,2 mm., Black			**68091**
Insignia A Sedan (G09) 2.0 CDTI (69)			**2013-17**
A 20 DTH	120	163	
Rear			**68082**
Before particulate filter, 225,2 mm., Black			**68091**
Insignia A Sedan (G09) 2.0 CDTI (69)			**2008-17**
A 20 DTC, A 20 DTL	81	110	
Rear			**68082**
Before particulate filter, 225,2 mm., Black			**68091**
Insignia A Sedan (G09) 2.0 CDTI (69)			**2008-17**
A 20 DT, A 20 DTJ	96	131	
Rear			**68082**
Before particulate filter, 225,2 mm., Black			**68091**
Insignia A Sedan (G09) 2.0 CDTI (69)			**2008-17**
A 20 DTH	118	160	
09.2008 ->, Rear			**68082**
Before particulate filter, 225,2 mm., Black			**68091**
Insignia A Sedan (G09) 2.0 CDTI (69)			**2012-17**
A 20 DTE	88	120	
Rear			**68082**
Before particulate filter, 225,2 mm., Black			**68091**
Insignia A Sedan (G09) 2.0 CDTI 4x4 (69)			**2013-17**
A 20 DTH	120	163	
Rear			**68082**
Before particulate filter, 225,2 mm., Black			**68091**
Insignia A Sedan (G09) 2.0 CDTI 4x4 (69)			**2010-17**
A 20 DTH	118	160	
Rear			**68082**
Before particulate filter, 225,2 mm., Black			**68091**
Insignia A Sports Tourer (G09) 2.0 CDTI (35)			**2013-15**
A 20 DTH	120	163	
Rear			**68082**
Before particulate filter, 225,2 mm., Black			**68091**
Insignia A Sports Tourer (G09) 2.0 CDTI (35)			**2013-15**
A 20 DTE	103	140	
Rear			**68082**
Before particulate filter, 225,2 mm., Black			**68091**
Insignia A Sports Tourer (G09) 2.0 CDTI (35)			**2008-13**
A 20 DTC, A 20 DTL	81	110	
Rear			**68082**
Before particulate filter, 225,2 mm., Black			**68091**
Insignia A Sports Tourer (G09) 2.0 CDTI (35)			**2008-15**
A 20 DT, A 20 DTJ	96	131	
02.2009 ->, Rear			**68082**
Before particulate filter, 225,2 mm., Black			**68091**
Insignia A Sports Tourer (G09) 2.0 CDTI (35)			**2008-15**
A 20 DTH	118	160	
02.2009 ->, Rear			**68082**
Before particulate filter, 225,2 mm., Black			**68091**
Insignia A Sports Tourer (G09) 2.0 CDTI (35)			**2012-15**
A 20 DTE	88	120	
09.2013 ->, Rear			**68082**
Before particulate filter, 225,2 mm., Black			**68091**
Insignia A Sports Tourer (G09) 2.0 CDTI 4x4 (35)			**2013-15**
A 20 DTH	120	163	
Rear			**68082**
Before particulate filter, 225,2 mm., Black			**68091**
Insignia A Sports Tourer (G09) 2.0 CDTI 4x4 (35)			**2010-15**
A 20 DTH	118	160	
Rear			**68082**
Before particulate filter, 225,2 mm., Black			**68091**

OPEL Cont.

Meriva B Monospace (S10) 1.3 CDTI (75)			**2010-13**
A 13 DTC	55	75	
Before catalytic converter, 215.2 mm., Black			**68069**
Meriva B Monospace (S10) 1.3 CDTI (75)			**2010-14**
A 13 DTE	70	95	
Before catalytic converter, 215.2 mm., Black			**68069**
Mokka / Mokka X (J13) 1.7 CDTI (76)			**2012 ->**
A 17 DTS	96	131	
Before catalytic converter, 385 mm., Black			**68096**
Mokka / Mokka X (J13) 1.7 CDTI 4x4 (76)			**2012 ->**
A 17 DTS	96	131	
Before catalytic converter, 385 mm., Black			**68096**
Signum Fastback (Z03) 1.9 CDTI (F48)			**2004-08**
Z 19 DT	88	120	
After catalytic converter, 275,2 mm., Black			**68047**
Signum Fastback (Z03) 1.9 CDTI (F48)			**2004-08**
Z 19 DTH	110	150	
After catalytic converter, 275,2 mm., Black			**68047**
Signum Fastback (Z03) 1.9 CDTI (F48)			**2005-08**
Z 19 DTL	74	100	
After catalytic converter, 275,2 mm., Black			**68047**
Signum Fastback (Z03) 3.0 V6 CDTI (F48)			**2005-08**
Z 30 DT	135	184	
After soot particulate filter, 1560 mm., Black			**68038**
Vectra C (Z02) 1.9 CDTI (F69)			**2004-09**
Z 19 DT	88	120	
After catalytic converter, 275,2 mm., Black			**68047**
Vectra C (Z02) 1.9 CDTI (F69)			**2004-08**
Z 19 DTH	110	150	
After catalytic converter, 275,2 mm., Black			**68047**
Vectra C (Z02) 1.9 CDTI (F69)			**2005-08**
Z 19 DTL	74	100	
After catalytic converter, 275,2 mm., Black			**68047**
Vectra C (Z02) 3.0 CDTi (F69)			**2005-08**
Z 30 DT	135	184	
After soot particulate filter, 1560 mm., Black			**68038**
Vectra C Estate (Z02) 1.9 CDTI (F35)			**2004-09**
Z 19 DT	88	120	
After catalytic converter, 275,2 mm., Black			**68047**
Vectra C Estate (Z02) 1.9 CDTI (F35)			**2004-08**
Z 19 DTH	110	150	
After catalytic converter, 275,2 mm., Black			**68047**
Vectra C Estate (Z02) 1.9 CDTI (F35)			**2005-08**
Z 19 DTL	74	100	
After catalytic converter, 275,2 mm., Black			**68047**
Vectra C GTS (Z02) 1.9 CDTI (F68)			**2004-09**
Z 19 DT	88	120	
After catalytic converter, 275,2 mm., Black			**68047**
Vectra C GTS (Z02) 1.9 CDTI (F68)			**2004-08**
Z 19 DTH	110	150	
After catalytic converter, 275,2 mm., Black			**68047**
Vectra C GTS (Z02) 1.9 CDTI (F68)			**2005-08**
Z 19 DTL	74	100	
Before catalytic converter, 215.2 mm., Black			**68069**
Vectra C GTS (Z02) 3.0 CDTi (F68)			**2005-08**
Z 30 DT	135	184	
After soot particulate filter, 1560 mm., Black			**68038**
Zafira / Zafira Family B (A05) 1.7 CDTI (M75)			**2008-15**
A 17 DTJ, Z 17 DTJ	81	110	
Engine A 17 DTJ, After catalytic converter			**68123**
Zafira / Zafira Family B (A05) 1.7 CDTI (M75)			**2007-15**
A 17 DTR, Z 17 DTR	92	125	
After catalytic converter, 1155.2 mm., Black			**68123**
Zafira / Zafira Family B (A05) 1.9 CDTI (M75)			**2005-15**
Z 19 DTH	110	150	
After catalytic converter, 275,2 mm., Black			**68047**
Before soot particulate filter, 1505,2 mm., Black			**68088**
Zafira / Zafira Family B (A05) 1.9 CDTI (M75)			**2005-10**
Z 19 DTL	74	100	
After catalytic converter, 275,2 mm., Black			**68047**
Before soot particulate filter, 1505,2 mm., Black			**68088**
Zafira / Zafira Family B (A05) 1.9 CDTI (M75)			**2005-15**
Z 19 DT	88	120	
After catalytic converter, 275,2 mm., Black			**68047**
Before soot particulate filter, 1505,2 mm., Black			**68088**
Zafira B Van/MPV (A05) 1.7 CDTI VAN (M75)			**2008-15**
A 17 DTR	92	125	
After catalytic converter, 1155.2 mm., Black			**68123**
Zafira B Van/MPV (A05) 1.7 CDTI VAN (M75)			**2008-15**
A 17 DTJ, Z 17 DTJ	81	110	
Engine A 17 DTJ, After catalytic converter			**68123**
Zafira Tourer C (P12) 2.0 CDTi (75)			**2011 ->**
A 20 DTH	121	165	
Before particulate filter, 225,2 mm., Black			**68091**

OPEL Cont.

Zafira Tourer C (P12) 2.0 CDTi (75)			**2011 ->**
A 20 DT, B 20 DTJ, D 20 DTJ, Y 20 DTJ, Z 20 DTJ	96	130	
Before particulate filter, 225,2 mm., Black			**68091**
Zafira Tourer C (P12) 2.0 CDTi (75)			**2011 ->**
A 20 DTL	81	110	
Before particulate filter, 225,2 mm., Black			**68091**

PEUGEOT

Bipper (AA) 1.3 HDi 75			**2010 ->**
FHZ (F13DTE5)	55	75	
Engine FHZ (F13DTE5)			**68080**
Bipper Tepee 1.3 HDi 75			**2010 ->**
FHZ (F13DTE5)	55	75	
Engine FHZ (F13DTE5)			**68080**
Boxer Bus 3.0 HDi 160			**2006 ->**
F1CE0481D (F30DT)	116	156	
Engine F1CE0481D (F30DT)			**68073**
Engine F1CE0481D (F30DT), Particulate Filter			**68074**
Boxer Chassis 3.0 HDi			**2006 ->**
F1CE0481D (F30DT)	115	156	
Engine F1CE0481D (F30DT)			**68073**
Engine F1CE0481D (F30DT), Particulate Filter			**68074**
Boxer Chassis 3.0 HDi 160			**2006 ->**
F1CE0481D (F30DT)	116	156	
Engine F1CE0481D (F30DT)			**68073**
Engine F1CE0481D (F30DT)			**68074**
Boxer Van 3.0 HDi			**2006 ->**
F1CE0481D (F30DT)	115	156	
Engine F1CE0481D (F30DT)			**68073**
Engine F1CE0481D (F30DT), Particulate Filter			**68074**
Boxer Van 3.0 HDi 160			**2006 ->**
F1CE0481D (F30DT)	116	156	
Engine F1CE0481D (F30DT)			**68073**
Engine F1CE0481D (F30DT), Particulate Filter			**68074**

PORSCHE

Cayenne (92A) 3.0 Diesel			**2014 ->**
MCV.VA	193	262	
Before soot particulate filter, 371 mm., Black			**68092**
Cayenne (92A) 3.0 Diesel			**2014 ->**
MCV.VB	184	250	
Before soot particulate filter, 371 mm., Black			**68092**
Cayenne (92A) 3.0 Diesel			**2010 ->**
MCR.CB, MCV.VC	155	211	
Before soot particulate filter, 371 mm., Black			**68092**
Cayenne (92A) 4.2 S Diesel			**2014 ->**
MCU.DC	283	385	
Engine MCU.DC, Before soot particulate filter, Left			**68068**
Cayenne (92A) 4.2 S Diesel			**2012 ->**
MCU.DB	281	382	
Engine MCU.DB, Before soot particulate filter, Left			**68068**
Macan (95B) 3.0 S Diesel			**2014-18**
MCT.BA	190	258	
After soot particulate filter, 236 mm., Brown			**68033**
Macan (95B) 3.0 S Diesel			**2014-18**
MCT.BB	155	211	
After soot particulate filter, 236 mm., Brown			**68033**
Macan (95B) 3.0 S Diesel			**2014-18**
MCT.BC	184	250	
After soot particulate filter, 236 mm., Brown			**68033**

SAAB

9-3 (YS3F, E79, D79, D75) 1.9 TiD			**2004-15**
Z 19 DT	88	120	
After catalytic converter, 275,2 mm., Black			**68047**
9-3 (YS3F, E79, D79, D75) 1.9 TiD			**2004-15**
Z 19 DTH	110	150	
After catalytic converter, 275,2 mm., Black			**68047**
9-3 (YS3F, E79, D79, D75) 1.9 TTiD			**2007-15**
A 19 DTR, Z 19 DTR	132	180	
Engine A 19 DTR, After catalytic converter			**68047**
9-3 Cabriolet (YS3F) 1.9 TiD			**2006-15**
Z 19 DTH	110	150	
After catalytic converter, 275,2 mm., Black			**68047**
9-3 Cabriolet (YS3F) 1.9 TTiD			**2007-15**
A 19 DTR, Z 19 DTR	132	180	
Engine A 19 DTR, After catalytic converter			**68047**
9-3 Cabriolet (YS3F) 1.9 TTiD			**2007-15**
A 19 DTR	118	160	
After catalytic converter, 275,2 mm., Black			**68047**

SAAB Cont.

9-3 Convertible (YS3F) 1.9 TTiD			**2007-15**
A 19 DTR	96	130	
After catalytic converter, 275,2 mm., Black			**68047**
9-3 Estate (E50) 1.9 TiD			**2005-15**
Z 19 DTH	110	150	
After catalytic converter, 275,2 mm., Black			**68047**
9-3 Estate (E50) 1.9 TTiD			**2007-15**
Z 19 DTR	132	180	
After catalytic converter, 275,2 mm., Black			**68047**
9-3 Estate (E50) 1.9 TTiD			**2007-15**
A 19 DTR	118	160	
After catalytic converter, 275,2 mm., Black			**68047**
9-3X (YS3) 1.9 TTiD AWD			**2009-12**
A 19 DTR, Z 19 DTR	132	180	
After catalytic converter, 275,2 mm., Black			**68047**
9-5 (YS3G) 2.0 TiD			**2010-12**
A 20 DTH	118	160	
Before particulate filter, 225,2 mm., Black			**68091**

SEAT

Altea (5P1) 1.6 TDI			**2009 ->**
CAYC	77	105	
Before soot particulate filter, 646 mm., Brown			**68002**
After soot particulate filter; 766 mm.			**68003**
Altea (5P1) 1.6 TDI			**2010 ->**
CAYB	66	90	
Before soot particulate filter, 646 mm., Brown			**68002**
Engine CAYB, After soot particulate filter			**68003**
Altea (5P1) 1.9 TDI			**2004 ->**
BJB, BKC, BLS, BXE	77	105	
BLS, 10.2005-09.2010, Ch.5P6044954-Ch.5PB014000, Before turbocharger			**68001**
BLS, 12.2005-09.2010, Ch.5P6044954-Ch.5PB014000; After soot particulate filter			**68005**
BLS, 12.2005-09.2010, Ch.5P6044954-Ch.5PB014000, Before soot particulate filter			**68011**
Altea (5P1) 2.0 TDI			**2006 ->**
BMN, CEGA	125	170	
-> 05.2010, Ch. 5P-6-049 159 ->, Before turbocharger			**68001**
Engine CEGA, 03.2009 - 10.2010, Ch.5P-9-026913 ->, Before soot particulate filter			**68002**
Engine CEGA, After soot particulate filter			**68003**
Engine BMN, Ch. 5P-6-049159-Ch. 5P-A-045000; After soot particulate filter			**68005**
Engine BMN, Before soot particulate filter			**68011**
Altea (5P1) 2.0 TDI			**2005 ->**
BMM	103	140	
-> 11.2010, Ch. 5P-6-040 552 - Ch. 5P-B-024 000, Before turbocharger			**68001**
-> 11.2010, Ch.5P-6-040552-Ch.5P-B-024000; After soot particulate filter			**68005**
BMM, -> 11.2010, Ch.5P-6-040 552-Ch.5P-B-024 000, Before soot particulate filter			**68011**
Altea XL (5P5, 5P8) 1.6 TDI			**2009 ->**
CAYC	77	105	
Before soot particulate filter, 646 mm., Brown			**68002**
After soot particulate filter; 766 mm.			**68003**
Altea XL (5P5, 5P8) 1.6 TDI			**2010 ->**
CAYB	66	90	
Before soot particulate filter, 646 mm., Brown			**68002**
After soot particulate filter; 766 mm.			**68003**
Altea XL (5P5, 5P8) 1.9 TDI			**2006-10**
BKC, BLS, BXE	77	105	
Engine BLS, -> 09.2010, Ch.5P7023100-Ch.5PB014000, Before turbocharger			**68001**
Engine BLS, -> 09.2010, Ch.5P7023100-Ch.5PB014000; After soot particulate filter			**68005**
Engine BLS, -> 09.2010, Ch.5P7023100-Ch.5PB014000, Before soot particulate filter			**68011**
Altea XL (5P5, 5P8) 1.9 TDI 4x4			**2009-10**
BLS	77	105	
Before soot particulate filter, 446 mm., Brown			**68011**
Altea XL (5P5, 5P8) 2.0 TDI			**2006 ->**
BMM	103	140	
-> 10.2011, Ch. 5P-7-023 100 - Ch. 5P-B-024 000, Before turbocharger			**68001**
01.2008-11.2010, Ch.5P8043935-Ch.5PB024000; After soot particulate filter			**68005**
-> 11.2010, Ch.5P-7-023100-Ch.5P-B-024000, Before soot particulate filter			**68011**
Altea XL (5P5, 5P8) 2.0 TDI			**2007-13**
BMN, CEGA	125	170	
Ch. 5P-7-023 100 ->, Before turbocharger			**68001**
Engine CEGA, Before soot particulate filter			**68002**
Engine CEGA, After soot particulate filter			**68003**
Engine BMN, Ch. 5P-8-000001-Ch. 5P-A-045000; After soot particulate filter			**68005**
Engine BMN, Before soot particulate filter			**68011**
Altea XL (5P5, 5P8) 2.0 TDI 16V 4x4			**2010 ->**
CFHC	103	140	
Before turbocharger, 656 mm., Black			**68001**
After soot particulate filter; 766 mm.			**68005**

SEAT Cont.

Altea XL (5P5, 5P8) 2.0 TDI 4x4			**2007-09**
BMN, CEGA, CFJA	125	170	
Ch. 5P-8-000 001 ->, Before turbocharger			**68001**
Engine CEGA, 05.2009 ->, Ch. 5P-9-506751 ->, Before soot particulate filter			**68002**
Engine CEGA, After soot particulate filter			**68003**
Engine BMN, Ch. 5P-8-000001-Ch. 5P-A-045000; After soot particulate filter			**68005**
Engine BMN, Before soot particulate filter			**68011**
Altea XL (5P5, 5P8) 2.0 TDI 4x4			**2007 ->**
BMM	103	140	
01.2008 - 11.2010, Ch. 5P-8-043 935 - Ch. 5P-B-024 000, Before turbocharger			**68001**
-> 05.2010, Ch.5P-7-023100-Ch.5P-A-045000; After soot particulate filter			**68005**
01.2008-11.2010, Ch.5P8043935-Ch.5PB024000, Before soot particulate filter			**68011**
Arona (KJ7, KJP) 1.6 TDI			**2017 ->**
DGTA	85	115	
-> 12.2020, Before catalytic converter			**68019**
Engine DGTA, With factory fitted soot -/particulate filter, 696 mm.			**68059**
Engine DGTA, Before soot particulate filter			**68078**
Arona (KJ7, KJP) 1.6 TDI			**2017 ->**
DGTD	70	95	
Before catalytic converter			**68019**
Engine DGTD, With factory fitted soot -/particulate filter, 696 mm.			**68059**
Engine DGTD, Before soot particulate filter			**68078**
Ateca (KH7, KHP) 1.6 TDI			**2016 ->**
DDYA, DGTE	85	115	
For vehicles without urea injection, Before soot particulate filter			**68013**
Engine DGTE, With factory fitted soot -/particulate filter, 696 mm.			**68059**
Engine DDYA, Engine DGTE, PR 1,00E+09, Before soot particulate filter			**68078**
Cordoba (6L2) 1.4 TDI			**2005-09**
BMS, BNV	59	80	
Engine BMS, Before soot particulate filter			**68049**
Engine BMS, Ch. 6L-7-150 001 ->, Exhaust turbocharger, R.H.D.			**68056**
Engine BMS, Exhaust turbocharger			**68063**
Engine BMS, R.H.D.			**68064**
Cordoba (6L2) 1.9 TDI			**2002-09**
ATD, AXR, BMT	74	100	
Engine BMT, Before soot particulate filter			**68049**
Engine BMT, Exhaust turbocharger			**68056**
Engine BMT, 12.2005 ->			**68058**
Engine BMT, Model 2006 ->, Exhaust turbocharger			**68063**
Exeo (3R2) 2.0 TDI			**2008-13**
CAGA, CJCA	105	143	
Engine CAGA, -> Model 2012, After soot particulate filter			**68028**
Engine CAGA, Exhaust turbocharger			**68056**
Before soot particulate filter, 371 mm., Black			**68092**
Exeo (3R2) 2.0 TDI			**2009-13**
CAHA, CGLB	125	170	
Engine CAHA, -> Model 2012, After soot particulate filter			**68028**
Engine CAHA, Exhaust turbocharger			**68056**
Before soot particulate filter, 371 mm., Black			**68092**
Exeo (3R2) 2.0 TDI			**2008-13**
CAGC, CJCC	88	120	
Engine CAGC, -> Model 2012, After soot particulate filter			**68028**
Engine CAGC, Exhaust turbocharger			**68056**
Before soot particulate filter, 371 mm., Black			**68092**
Exeo ST (3R5) 2.0 TDI			**2009-13**
CAGA, CJCA	105	143	
Engine CAGA, -> Model 2012, After soot particulate filter			**68028**
Engine CAGA, Exhaust turbocharger			**68056**
Before soot particulate filter, 371 mm., Black			**68092**
Exeo ST (3R5) 2.0 TDI			**2009-13**
CAHA, CGLB	125	170	
Engine CAHA, -> Model 2012, After soot particulate filter			**68028**
Exhaust turbocharger, 731 mm., Black			**68056**
Before soot particulate filter, 371 mm., Black			**68092**
Exeo ST (3R5) 2.0 TDI			**2009-13**
CAGC, CJCC	88	120	
Engine CAGC, -> Model 2012, After soot particulate filter			**68028**
Engine CAGC, Exhaust turbocharger			**68056**
Before soot particulate filter, 371 mm., Black			**68092**
Ibiza III (6L1) 1.4 TDI			**2005-09**
BMS, BNV	59	80	
Engine BMS, Before soot particulate filter			**68049**
Engine BMS, Ch. 6L-7-150 001 ->, Exhaust turbocharger, R.H.D.			**68056**
Engine BMS			**68058**
Engine BMS, Exhaust turbocharger			**68063**
Engine BMS, R.H.D.			**68064**
Ibiza III (6L1) 1.9 TDI			**2002-09**
ATD, AXR, BMT	74	100	
Engine BMT, Before soot particulate filter			**68049**
Exhaust turbocharger, 731 mm., Black			**68056**
Engine BMT, Model 2006 ->			**68058**
Engine BMT, Model 2006 ->, Exhaust turbocharger			**68063**
Engine BMT, R.H.D.			**68064**

SEAT Cont.

Ibiza IV (6J5, 6P1) 1.2 TDI		**2010-12**
CFWA	55	75
Before soot particulate filter, 526 mm., Brown		**68021**
After soot particulate filter; 501 mm.; R.H.D.		**68024**
Before soot particulate filter; 426 mm., Brown		**68036**
Ibiza IV (6J5, 6P1) 1.4 TDI		**2008-10**
BMS	59	80
Engine BMS, Before soot particulate filter		**68049**
Exhaust turbocharger, 731 mm., Black		**68056**
Ch. 6L9-000 001 ->		**68058**
Engine BMS, Exhaust turbocharger		**68063**
R.H.D.		**68064**
Ibiza IV (6J5, 6P1) 1.6 TDI		**2009-15**
CAYB	66	90
Before soot particulate filter, 526 mm., Brown		**68021**
After soot particulate filter; 501 mm.; R.H.D.		**68024**
After soot particulate filter; 746 mm.		**68035**
-> 09.2010; Before soot particulate filter		**68036**
Ibiza IV (6J5, 6P1) 1.6 TDI		**2009-15**
CAYC, CLNA	77	105
Engine CAYC, Before soot particulate filter		**68021**
After soot particulate filter; 501 mm.; R.H.D.		**68024**
Engine CAYC; After soot particulate filter		**68035**
Engine CAYC, -> 09.2010; Before soot particulate filter		**68036**
Ibiza IV (6J5, 6P1) 1.9 TDI		**2008-10**
BXJ	66	90
Before turbocharger, 656 mm., Black		**68001**
Ch. 6J-9-000 001 ->, Before soot particulate filter		**68049**
Before turbocharger, Ch. 6J-9-000 001 ->		**68058**
Ibiza IV (6J5, 6P1) 1.9 TDI		**2008-10**
BLS	77	105
Ch. 6J-9-000 001 ->, Before soot particulate filter		**68049**
Before turbocharger, Ch. 6J-9-000 001 ->		**68058**
Exhaust turbocharger, 726 mm., Black		**68063**
Ibiza IV SC (6J1, 6P5) 1.2 TDI		**2010-15**
CFWA	55	75
Before soot particulate filter, 526 mm., Brown		**68021**
After soot particulate filter; 501 mm.; R.H.D.		**68024**
-> 03.2012; Before soot particulate filter		**68036**
Ibiza IV SC (6J1, 6P5) 1.4 TDI		**2008-10**
BMS	59	80
Ch. 6L-9-000 001 ->, Before soot particulate filter		**68049**
Exhaust turbocharger, 731 mm., Black		**68056**
Ch. 6J-9-000 001 ->		**68058**
Exhaust turbocharger, 726 mm., Black		**68063**
R.H.D.		**68064**
Ibiza IV SC (6J1, 6P5) 1.6 TDI		**2009-15**
CAYB	66	90
Before soot particulate filter, 526 mm., Brown		**68021**
After soot particulate filter; 501 mm.; R.H.D.		**68024**
After soot particulate filter; 746 mm.		**68035**
-> 09.2010; Before soot particulate filter		**68036**
Ibiza IV SC (6J1, 6P5) 1.6 TDI		**2009-15**
CAYC	77	105
Engine CAYC, Before soot particulate filter		**68021**
After soot particulate filter; 501 mm.; R.H.D.		**68024**
Engine CAYC; After soot particulate filter		**68035**
Engine CAYC, -> 09.2010; Before soot particulate filter		**68036**
Ibiza IV SC (6J1, 6P5) 1.9 TDI		**2008-10**
BXJ	66	90
Before turbocharger, 656 mm., Black		**68001**
Before soot particulate filter, 406 mm., Brown		**68049**
Before turbocharger, Ch. 6J-9-000 001 ->		**68058**
Ibiza IV SC (6J1, 6P5) 1.9 TDI		**2008-10**
BLS	77	105
Before soot particulate filter, 406 mm., Brown		**68049**
Ch. 6J-9-000 001 ->, Exhaust turbocharger		**68063**
Ibiza IV ST (6J8, 6P8) 1.2 TDI		**2010-15**
CFWA	55	75
Before soot particulate filter, 526 mm., Brown		**68021**
After soot particulate filter; 501 mm.; R.H.D.		**68024**
-> 03.2012; Before soot particulate filter		**68036**
Ibiza IV ST (6J8, 6P8) 1.6 TDI		**2010-15**
CAYB	66	90
Before soot particulate filter, 526 mm., Brown		**68021**
After soot particulate filter; 501 mm.; R.H.D.		**68024**
After soot particulate filter; 746 mm.		**68035**
-> 09.2010; Before soot particulate filter		**68036**
Ibiza IV ST (6J8, 6P8) 1.6 TDI		**2010-15**
CAYC, CLNA	77	105
Engine CAYC, Before soot particulate filter		**68021**
Engine CAYC; After soot particulate filter; R.H.D.		**68024**
Engine CAYC; After soot particulate filter		**68035**
Engine CAYC, -> 09.2010; Before soot particulate filter		**68036**

FAE

SEAT Cont.

Ibiza V (KJ1, KJG) 1.6 TDI		**2017 ->**
DGTD	70	95
Before catalytic converter		**68019**
Engine DGTD, With factory fitted soot -/particulate filter, 696 mm.		**68059**
Engine DGTD, Before soot particulate filter		**68078**
Ibiza V (KJ1, KJG) 1.6 TDI		**2017 ->**
DGTC	59	80
-> 12.2020, Before catalytic converter		**68019**
Engine DGTC, With factory fitted soot -/particulate filter, 696 mm.		**68059**
Engine DGTC, Before soot particulate filter		**68078**
Ibiza V (KJ1, KJG) 1.6 TDI		**2017 ->**
DGTA	85	115
-> 12.2020, Before catalytic converter		**68019**
Engine DGTA, With factory fitted soot -/particulate filter, 696 mm.		**68059**
Engine DGTA, Before soot particulate filter		**68078**
Leon (1P1) 1.6 TDI		**2010-12**
CAYB	66	90
Before soot particulate filter, 646 mm., Brown		**68002**
After soot particulate filter; 766 mm.		**68003**
Leon (1P1) 1.6 TDI		**2010-12**
CAYC	77	105
Before soot particulate filter, 646 mm., Brown		**68002**
After soot particulate filter; 766 mm.		**68003**
Leon (1P1) 1.9 TDI		**2005-10**
BKC, BLS, BXE	77	105
BLS, 06.2006 - 05.2010, Ch.1P6073576-Ch.1PA085000, Before turbocharger		**68001**
BLS, 03.2006-05.2010, Ch.1P6073576-Ch.1PA085000; After soot particulate filter		**68005**
BLS, Ch.1P6073576-Ch.1PA085000, Before soot particulate filter		**68011**
Leon (1P1) 2.0 TDI		**2006-12**
BMN, CEGA, CFJA	125	170
Engine BMN, Engine CEGA, -> 10.2010, Ch.1KB000001 ->, Before turbocharger		**68001**
Engine CEGA, Before soot particulate filter		**68002**
Engine CEGA, After soot particulate filter		**68003**
Engine BMN, -> 03.2009, Ch.1P6063491-Ch.1K9504000; After soot particulate filter		**68005**
Engine BMN, Before soot particulate filter		**68011**
Leon (1P1) 2.0 TDI		**2005-10**
BMM	103	140
Ch. 1P-B-036 000 ->, Before turbocharger		**68001**
Ch. 1P-6-027123 - Ch. 1P-B-036000; After soot particulate filter		**68005**
Ch. 1P-6-027 123 - Ch. 1P-B-036 000, Before soot particulate filter		**68011**
Leon (5F1) 1.6 TDI		**2016-20**
DDYA, DGTE	85	115
Engine DGTE, With factory fitted soot -/particulate filter, 696 mm.		**68059**
Engine DDYA, Engine DGTE, Euro 6c, Euro 6d-Temp, Before soot particulate filter		**68078**
Leon (5F1) 1.6 TDI		**2012-20**
CLHA	77	105
After soot particulate filter, 666 mm.		**68014**
Ch. 5F-D-000 001 ->, Before soot particulate filter		**68017**
Ch. 5F-D-000001 ->, Before catalytic converter		**68048**
Leon (5F1) 1.6 TDI		**2012-18**
CLHB, CXXA, DDYB	66	90
After soot particulate filter, 666 mm.		**68014**
Ch. 5F-D-000 001 ->, Before soot particulate filter		**68017**
Engine CXXA, 05.2015 - 12.2016, Before catalytic converter		**68019**
Engine CLHB, Ch. 5F-D-000001 ->, Before catalytic converter		**68048**
Leon (5F1) 1.6 TDI		**2013-20**
CRKB, CXXB, DBKA	81	110
Engine DBKA, Engine CXXB, Before soot particulate filter		**68013**
After soot particulate filter, 666 mm.		**68014**
Engine CRKB, Ch. 5F-D-000 001 ->, Before soot particulate filter		**68017**
Engine CXXB, Engine DBKA, 11.2014 - 10.2016, Before catalytic converter		**68019**
Engine DBKA, Ch. 5F-D-000001 ->, Before catalytic converter		**68048**
Leon (5F1) 2.0 TDI		**2012-20**
CKFC, CRMB, DFFA	110	150
Engine CKFC, Engine CRMB, In front of exhaust turbocharger		**68007**
Leon (5F1) 2.0 TDI		**2012-20**
CUNA, CUPA, DJGA	135	184
Engine CUPA, Engine CUNA, In front of exhaust turbocharger		**68007**
Leon SC (5F5) 1.6 TDI		**2016-18**
DDYA	85	115
Before catalytic converter		**68019**
Engine DDYA, Euro 6c, Euro 6d-Temp, Before soot particulate filter		**68078**
Leon SC (5F5) 1.6 TDI		**2013-18**
CLHB, CXXA, DDYB	66	90
After soot particulate filter, 666 mm.		**68014**
Before soot particulate filter, 881 mm., Brown		**68017**
Engine CXXA, 05.2015 - 10.2016, Before catalytic converter		**68019**
Ch. 5F-D-000001 ->, Before catalytic converter		**68048**
Leon SC (5F5) 1.6 TDI		**2013-18**
CLHA	77	105
After soot particulate filter, 666 mm.		**68014**
Before soot particulate filter, 881 mm., Brown		**68017**
Ch. 5F-D-000001 ->, Before catalytic converter		**68048**

SEAT Cont.

Leon SC (5F5) 1.6 TDI			**2013-16**
CRKB, CXXB	81	110	
Engine CXXB, Before soot particulate filter			**68013**
After soot particulate filter, 666 mm.			**68014**
Engine CRKB, Before soot particulate filter			**68017**
Engine CXXB, 11.2014 - 10.2016, Before catalytic converter			**68019**
Engine CXXB, Ch. 5F-D-000001 ->, , Before catalytic converter			**68048**
Leon SC (5F5) 2.0 TDI			**2013-18**
CKFC, CRMB	110	150	
In front of exhaust turbocharger, 566 mm., Black			**68007**
Leon SC (5F5) 2.0 TDI			**2013-18**
CUNA, CUPA	135	184	
In front of exhaust turbocharger, 566 mm., Black			**68007**
Leon ST (5F8) 1.6 TDI			**2013-20**
CRKB, CXXB, DBKA	81	110	
Engine DBKA, Engine CXXB, Before soot particulate filter			**68013**
After soot particulate filter, 666 mm.			**68014**
Before soot particulate filter, 881 mm., Brown			**68017**
Engine CXXB, Engine DBKA, 11.2014 - 10.2016, Before catalytic converter			**68019**
Engine DBKA, Ch. 5F-D-000001 ->, Before catalytic converter			**68048**
Leon ST (5F8) 1.6 TDI			**2016-20**
DDYA, DGTE	85	115	
Before catalytic converter			**68019**
Engine DGTE, With factory fitted soot -/particulate filter, 696 mm.			**68059**
Engine DGTE, Engine DDYA, Euro 6d-Temp, Euro 6c, Before soot particulate filter			**68078**
Leon ST (5F8) 1.6 TDI			**2013-18**
CLHB, CXXA, DDYB	66	90	
After soot particulate filter, 666 mm.			**68014**
Before soot particulate filter, 881 mm., Brown			**68017**
Engine CXXA, 05.2015 - 10.2016, Before catalytic converter			**68019**
Engine CLHB, Ch. 5F-D-000001 ->, Before catalytic converter			**68048**
Leon ST (5F8) 1.6 TDI			**2013-20**
CLHA	77	105	
After soot particulate filter, 666 mm.			**68014**
Before soot particulate filter, 881 mm., Brown			**68017**
Ch. 5F-D-000001 ->, Before catalytic converter			**68048**
Leon ST (5F8) 1.6 TDI 4Drive			**2014-20**
CLHA	77	105	
After soot particulate filter, 666 mm.			**68014**
Before soot particulate filter, 881 mm., Brown			**68017**
Ch. 5F-D-000001 ->, Before catalytic converter			**68048**
Leon ST (5F8) 1.6 TDI 4Drive			**2014-20**
CXXB	81	110	
After soot particulate filter, 666 mm.			**68014**
Before soot particulate filter, 881 mm., Brown			**68017**
Ch. 5F-D-000001 ->, Before catalytic converter			**68048**
Leon ST (5F8) 1.6 TDI 4Drive			**2018-20**
DGTE	85	115	
Before catalytic converter			**68019**
Engine DGTE, Euro 6c, Euro 6d-Temp, Before soot particulate filter			**68078**
Leon ST (5F8) 2.0 TDI			**2013-18**
CKFC, CRBC, CRLB, CRMB, DFFA, DFGA	110	150	
Engine CRLB, Engine CRMB, Engine CKFC, In front of exhaust turbocharger			**68007**
Leon ST (5F8) 2.0 TDI			**2013-20**
CUNA, CUPA, DJGA	135	184	
Engine CUPA, Engine CUNA, In front of exhaust turbocharger			**68007**
Leon ST (5F8) 2.0 TDI 4Drive			**2014-18**
CRBC, CRLB, CRMB, DCYA, DFGA	110	150	
Engine CRMB, Engine CRLB, In front of exhaust turbocharger			**68007**
Leon ST (5F8) 2.0 TDI 4Drive			**2014-18**
CUNA, DJGA	135	184	
In front of exhaust turbocharger, 566 mm., Black			**68007**
Leon ST Van/Estate (5F8) 1.6 TDI			**2013-20**
CRKB, CXXB, DBKA	81	110	
Engine DBKA, 05.2015 - 10.2016, Before catalytic converter			**68019**
Leon ST Van/Estate (5F8) 1.6 TDI			**2016-20**
DDYA	85	115	
Before catalytic converter			**68019**
Engine DDYA, Euro 6c, Euro 6d-Temp, Before soot particulate filter			**68078**
Leon ST Van/Estate (5F8) 2.0 TDI			**2013-18**
CKFC, CRBC, CRLB, CRMB	110	150	
Engine CKFC, Engine CRLB, Engine CRMB, In front of exhaust turbocharger			**68007**
Leon ST Van/Estate (5F8) 2.0 TDI			**2013-18**
CUNA, CUPA	135	184	
In front of exhaust turbocharger, 566 mm., Black			**68007**
Leon ST Van/Estate (5F8) 2.0 TDI 4Drive			**2014-18**
CRBC, CRLB	110	150	
Engine CRLB, In front of exhaust turbocharger			**68007**
Leon ST Van/Estate (5F8) 2.0 TDI 4Drive			**2014-18**
CUNA	135	184	
In front of exhaust turbocharger, 566 mm., Black			**68007**
Leon Van (5F1) 1.6 TDI			**2013-16**
CRKB, CXXB, DBKA	81	110	
Engine DBKA, 05.2015 ->, Before catalytic converter			**68019**

SEAT Cont.

Leon Van (5F1) 1.6 TDI			**2016-20**
DDYA	85	115	
Engine DDYA, Euro 6c, Euro 6d-Temp, Before soot particulate filter			**68078**
Toledo III (5P2) 1.9 TDI			**2004-09**
BJB, BKC, BLS, BXE	77	105	
Engine BLS, 03.2006 ->, Ch.5P6052211-Ch.5P9508000, Before turbocharger			**68001**
Engine BLS, 03.2006 ->, Ch.5P6052211-Ch.5P9508000; After soot particulate filter			**68005**
BLS, 03.2006-05.2010, Ch.5P6052211-Ch.5P9508000, Before soot particulate filter			**68011**
Toledo III (5P2) 2.0 TDI			**2006-09**
BMN, CEGA	125	170	
Ch. 5P-6-046 786 - Ch. 5P-9-508 000, Before turbocharger			**68001**
CEGA, 03.2009 ->, Ch.5P-9-026913-Ch.5P-9-508000, Before soot particulate filter			**68002**
CEGA, 03.2009 ->, Ch.5P-9-026913-Ch.5P-9-508000, After soot particulate filter			**68003**
Engine BMN, Ch. 5P-6-046786-Ch. 5P-9-508000; After soot particulate filter			**68005**
Engine BMN, Ch.5P-6-046 786-Ch.5P-9-508 000, Before soot particulate filter			**68011**
Toledo III (5P2) 2.0 TDI			**2005-09**
BMM	103	140	
Ch. 5P-6-040 552 - Ch. 5P-9-508 000, Before turbocharger			**68001**
Ch. 5P-6-040552 - Ch. 5P-9-508000; After soot particulate filter			**68005**
Ch. 5P-6-040 552 - Ch. 5P-9-508 000, Before soot particulate filter			**68011**
Toledo IV (KG3) 1.6 TDI			**2013-15**
CAYB	66	90	
After soot particulate filter; 501 mm.; R.H.D.			**68024**
After soot particulate filter; 746 mm.			**68035**
Before soot particulate filter; 426 mm., Brown			**68036**
Toledo IV (KG3) 1.6 TDI			**2015-19**
CXMA	85	115	
Before soot particulate filter; 426 mm., Brown			**68036**
Toledo IV (KG3) 1.6 TDI			**2012-15**
CAYC, CLNA	77	105	
Engine CAYC, Before soot particulate filter			**68021**
Engine CAYC; After soot particulate filter; R.H.D.			**68024**
Engine CAYC; After soot particulate filter			**68035**
Before soot particulate filter; 426 mm., Brown			**68036**

SKODA

Fabia II (542) 1.2 TDI			**2010-14**
CFWA	55	75	
After soot particulate filter; 501 mm.; R.H.D.			**68024**
-> 09.2010; Before soot particulate filter			**68036**
Fabia II (542) 1.4 TDI			**2007-10**
BMS, BNV	59	80	
Engine BMS, Ch. 5J-8-000 001 ->, Before soot particulate filter			**68049**
Engine BMS, R.H.D.			**68056**
Engine BMS, Exhaust turbocharger			**68063**
Engine BMS			**68064**
Fabia II (542) 1.6 TDI			**2010-14**
CAYB	66	90	
Before soot particulate filter, 526 mm., Brown			**68021**
After soot particulate filter; 501 mm.; R.H.D.			**68024**
After soot particulate filter; 746 mm.			**68035**
-> 09.2010; Before soot particulate filter			**68036**
Fabia II (542) 1.6 TDI			**2010-14**
CAYC	77	105	
Before soot particulate filter, 526 mm., Brown			**68021**
After soot particulate filter; 501 mm.; R.H.D.			**68024**
After soot particulate filter; 746 mm.			**68035**
-> 09.2010; Before soot particulate filter			**68036**
Fabia II (542) 1.6 TDI			**2010-14**
CAYA	55	75	
Before soot particulate filter, 526 mm., Brown			**68021**
After soot particulate filter; 501 mm.; R.H.D.			**68024**
After soot particulate filter; 746 mm.			**68035**
-> 09.2010; Before soot particulate filter			**68036**
Fabia II (542) 1.9 TDI			**2007-10**
BLS, BSW	77	105	
Before turbocharger, 656 mm., Black			**68001**
Engine BLS, Before soot particulate filter			**68049**
Engine BLS			**68058**
Fabia II Combi (545) 1.2 TDI			**2010-14**
CFWA	55	75	
Before soot particulate filter, 526 mm., Brown			**68021**
After soot particulate filter; 501 mm.; R.H.D.			**68024**
After soot particulate filter; 746 mm.			**68035**
-> 05.2010; Before soot particulate filter			**68036**
Fabia II Combi (545) 1.4 TDI			**2007-10**
BMS, BNV	59	80	
Engine BMS, Before soot particulate filter			**68049**
Engine BMS, R.H.D.			**68056**
Engine BMS, Exhaust turbocharger			**68063**
Engine BMS			**68064**

SKODA Cont.

Fabia II Combi (545) 1.6 TDI			**2010-14**
CAYB	66	90	
Before soot particulate filter, 526 mm., Brown			**68021**
After soot particulate filter; 501 mm.; R.H.D.			**68024**
After soot particulate filter; 746 mm.			**68035**
-> 09.2010; Before soot particulate filter			**68036**
Fabia II Combi (545) 1.6 TDI			**2010-14**
CAYC	77	105	
Before soot particulate filter, 526 mm., Brown			**68021**
After soot particulate filter; 501 mm.; R.H.D.			**68024**
After soot particulate filter; 746 mm.			**68035**
-> 09.2010; Before soot particulate filter			**68036**
Fabia II Combi (545) 1.6 TDI			**2010-14**
CAYA	55	75	
Before soot particulate filter, 526 mm., Brown			**68021**
After soot particulate filter; 501 mm.; R.H.D.			**68024**
After soot particulate filter; 746 mm.			**68035**
-> 09.2010; Before soot particulate filter			**68036**
Fabia II Combi (545) 1.9 TDI			**2007-10**
BLS, BSW	77	105	
Before turbocharger, 656 mm., Black			**68001**
Engine BLS, Before soot particulate filter			**68049**
Engine BLS			**68058**
Kamiq (NW4) 1.6 TDI			**2019 ->**
DGTA	85	115	
Before catalytic converter			**68019**
With factory fitted soot -/particulate filter, 696 mm.			**68059**
Engine DGTA, Euro 6d-Temp, Before soot particulate filter			**68078**
Karoq (NU7, ND7) 1.6 TDI			**2017 ->**
DDYA, DGTE	85	115	
-> 12.2020, Euro 6+, Before catalytic converter			**68019**
With urea injection, With factory fitted soot -/particulate filter, 696 mm.			**68059**
Engine DGTE, Euro 6d-Temp, Before soot particulate filter			**68078**
Engine DDYA, Euro 6b, Euro 6c, Before soot particulate filter			**68078**
Octavia II (1Z3) 1.6 TDI			**2009-13**
CAYC	77	105	
Before soot particulate filter, 646 mm., Brown			**68002**
After soot particulate filter; 766 mm.			**68003**
Octavia II (1Z3) 1.9 TDI			**2004-10**
BJB, BKC, BLS, BXE	77	105	
05.2006 - 05.2010, Ch. 1Z-6-086 263 - Ch. 1Z-B-150 017, Before turbocharger			**68001**
BLS, 05.2006-05.2010, Ch.1Z6086263-Ch.1ZB150017; After soot particulate filter			**68005**
BLS, 05.2006-05.2010, Ch.1Z6086263-Ch.1ZB150017, Before soot particulate filter			**68011**
Octavia II (1Z3) 2.0 TDI			**2005-10**
BMM	103	140	
Ch. 1Z-6-066 910 - Ch. 1Z-B-150 017, Before turbocharger			**68001**
Ch. 1Z-6-066910 - Ch. 1Z-B-150017; After soot particulate filter			**68005**
Ch. 1Z-6-066 910 - Ch. 1Z-B-150 017, Before soot particulate filter			**68011**
Octavia II (1Z3) 2.0 TDI 16V			**2004-13**
BKD, CFHC, CLCB	103	140	
Engine BKD; After soot particulate filter			**68005**
Octavia II (1Z3) 2.0 TDI RS			**2006-13**
BMN, CEGA	125	170	
Ch. 1Z-6-083 091 ->, Before turbocharger			**68001**
Before soot particulate filter, 646 mm., Brown			**68002**
Engine CEGA, 07.2009 ->, After soot particulate filter			**68003**
Engine BMN, -> 05.2008, Ch. 1Z-6-083091 ->; After soot particulate filter			**68005**
Engine BMN, -> 05.2008, Ch. 1Z-6-083 091 ->, Before soot particulate filter			**68011**
Octavia II Combi (1Z5) 1.6 TDI			**2009-13**
CAYC	77	105	
Before soot particulate filter, 646 mm., Brown			**68002**
After soot particulate filter; 766 mm.			**68003**
Octavia II Combi (1Z5) 1.6 TDI 4x4			**2009-13**
CAYC	77	105	
Before soot particulate filter, 646 mm., Brown			**68002**
After soot particulate filter; 766 mm.			**68003**
Octavia II Combi (1Z5) 1.9 TDI			**2004-10**
BJB, BKC, BLS, BXE	77	105	
Engine BLS, 05.2006 - 05.2010, Ch.1Z6086263-Ch.1ZB150017, Before turbocharger			**68001**
BLS, 05.2006-05.2010, Ch.1Z6086263-Ch.1ZB150017; After soot particulate filter			**68005**
BLS, 05.2006-05.2010, Ch.1Z6086263-Ch.1ZB150017, Before soot particulate filter			**68011**
Octavia II Combi (1Z5) 1.9 TDI 4x4			**2004-10**
BKC, BLS, BXE	77	105	
BLS, 05.2006 - 05.2010, Ch.1Z6086263-Ch1ZB150017, Before turbocharger			**68001**
BLS, 05.2006-05.2010, Ch.1Z6086263-Ch.1Z6150017; After soot particulate filter			**68005**
BLS, 05.2006-05.2010, Ch.1Z6086263-Ch.1ZB150017, Before soot particulate filter			**68011**
Octavia II Combi (1Z5) 2.0 TDI			**2005-10**
BMM	103	140	
Ch. 1Z-6-066 910 - Ch. 1Z-B-150 017, Before turbocharger			**68001**
Ch. 1Z-6-066910 - Ch. 1Z-B-150017; After soot particulate filter			**68005**
Ch. 1Z-6-066 910 - Ch. 1Z-B-150 017, Before soot particulate filter			**68011**

SKODA Cont.

Octavia II Combi (1Z5) 2.0 TDI 4x4			**2006-10**
BMM	103	140	
Ch. 1Z-6-152 086 - Ch. 1Z-B-150 017, Before turbocharger			**68001**
Ch. 1Z-6-152086 - Ch. 1Z-B-150017; After soot particulate filter			**68005**
Ch. 1Z-6-152 086 - Ch. 1Z-B-150 017, Before soot particulate filter			**68011**
Octavia II Combi (1Z5) 2.0 TDI RS			**2006-13**
BMN, CEGA	125	170	
Ch. 1Z-6-083 091 ->, Before turbocharger			**68001**
Engine CEGA, Before soot particulate filter			**68002**
Engine CEGA, 07.2009 ->, After soot particulate filter			**68003**
Engine BMN, -> 05.2008; After soot particulate filter			**68005**
Engine BMN, -> 05.2008, Ch. 1Z-6-083 091 ->, Before soot particulate filter			**68011**
Octavia III (5E3, NL3, NR3) 1.6 TDI			**2013-17**
CRKB, CXXB, DBKA	81	110	
Model 2014 ->, Ch. 5E-D000 001 ->, Before soot particulate filter			**68013**
Engine CRKB, 11.2013 ->, After soot particulate filter			**68014**
Before soot particulate filter, 881 mm., Brown			**68017**
Engine DBKA, Engine CXXB, 05.2015 ->, Before catalytic converter			**68019**
Engine CRKB, Before catalytic converter			**68048**
Octavia III (5E3, NL3, NR3) 1.6 TDI			**2017-20**
DDYA, DGTE	85	115	
Before catalytic converter			**68019**
Engine DGTE, With factory fitted soot -/particulate filter, 696 mm.			**68059**
Engine DGTE, Euro 6d-Temp, Euro 6c, Before soot particulate filter			**68078**
Engine DDYA, Before soot particulate filter			**68078**
Octavia III (5E3, NL3, NR3) 1.6 TDI			**2012-15**
CLHA	77	105	
After soot particulate filter, 666 mm.			**68014**
Before soot particulate filter, 881 mm., Brown			**68017**
Before catalytic converter, 666 mm., Black			**68048**
Octavia III (5E3, NL3, NR3) 1.6 TDI			**2012-20**
CLHB, CRKA, CXXA, DDYB	66	90	
-> 05.2015, After soot particulate filter			**68014**
Before soot particulate filter, 881 mm., Brown			**68017**
Engine DDYB, Engine CXXA, 05.2015 ->, Before catalytic converter			**68019**
Engine CLHB, Before catalytic converter			**68048**
Engine DDYB, Before soot particulate filter			**68078**
Octavia III (5E3, NL3, NR3) 1.6 TDI 4x4			**2014-15**
CLHA	77	105	
After soot particulate filter, 666 mm.			**68014**
Before soot particulate filter, 881 mm., Brown			**68017**
Before catalytic converter, 666 mm., Black			**68048**
Octavia III (5E3, NL3, NR3) 1.6 TDI 4x4			**2015-17**
CRKB, CXXB	81	110	
Before soot particulate filter, 896 mm., Brown			**68013**
Engine CXXB, Before catalytic converter			**68019**
Octavia III (5E3, NL3, NR3) 1.6 TDI 4x4			**2017-20**
DGTE	85	115	
Before catalytic converter			**68019**
Engine DGTE, With factory fitted soot -/particulate filter, 696 mm.			**68059**
Engine DGTE, Euro 6d-Temp, Euro 6c, Before soot particulate filter			**68078**
Octavia III (5E3, NL3, NR3) 2.0 TDI			**2012-20**
CKFC, CRMB, CYKA, DCYA, DFFA	110	150	
Engine CRMB, Engine CKFC, In front of exhaust turbocharger			**68007**
Octavia III (5E3, NL3, NR3) 2.0 TDI			**2012-17**
CKFB, CRVC	105	143	
Engine CRVC, In front of exhaust turbocharger			**68007**
Octavia III (5E3, NL3, NR3) 2.0 TDI / TDI RS 4x4			**2013-20**
CUNA, CUPA, DJGA	135	184	
In front of exhaust turbocharger, 566 mm., Black			**68007**
Octavia III (5E3, NL3, NR3) 2.0 TDI 4x4			**2014-20**
CKFC, CRMB, DCYA, DFFA	110	150	
Engine CKFC, Engine CRMB, In front of exhaust turbocharger			**68007**
Octavia III (5E3, NL3, NR3) 2.0 TDI RS			**2013-20**
CUNA, CUPA, DJGA	135	184	
In front of exhaust turbocharger, 566 mm., Black			**68007**
Octavia III Combi (5E5, 5E6) 1.6 TDI			**2013-17**
CRKB, CXXB, DBKA	81	110	
Engine CXXB, Ch. 5ED-000 001 ->, Before soot particulate filter			**68013**
Engine CRKB, After soot particulate filter			**68014**
Engine CRKB, Before soot particulate filter			**68017**
Engine CXXB, Engine DBKA, 05.2015 ->, Before catalytic converter			**68019**
Engine CRKB, Before catalytic converter			**68048**
Octavia III Combi (5E5, 5E6) 1.6 TDI			**2017-20**
DDYA, DGTA, DGTE	85	115	
Before catalytic converter			**68019**
Engine DGTE, With factory fitted soot -/particulate filter, 696 mm.			**68059**
Engine DDYA, Before soot particulate filter			**68078**
Engine DGTE, Euro 6d-Temp, Euro 6c, Before soot particulate filter			**68078**

SKODA Cont.

Octavia III Combi (5E5, 5E6) 1.6 TDI			**2012-15**
CLHA	77	105	
After soot particulate filter, 666 mm.			**68014**
Before soot particulate filter, 881 mm., Brown			**68017**
Before catalytic converter, 666 mm., Black			**68048**
Octavia III Combi (5E5, 5E6) 1.6 TDI			**2012-20**
CLHB, CRKA, CXXA, DDYB	66	90	
-> 05.2015, After soot particulate filter			**68014**
Before soot particulate filter, 881 mm., Brown			**68017**
Engine DDYB, Engine CXXA, 05.2015 ->, Before catalytic converter			**68019**
Engine CLHB, Before catalytic converter			**68048**
Engine DDYB, Before soot particulate filter			**68078**
Octavia III Combi (5E5, 5E6) 1.6 TDI 4x4			**2015-17**
CRKB, CXXB, DBKA	81	110	
Before soot particulate filter, 896 mm., Brown			**68013**
Engine CXXB, Before catalytic converter			**68019**
Octavia III Combi (5E5, 5E6) 1.6 TDI 4x4			**2017-20**
DGTE	85	115	
Before catalytic converter			**68019**
Engine DGTE, With factory fitted soot -/particulate filter, 696 mm.			**68059**
Engine DGTE, Euro 6c, Euro 6d-Temp, Before soot particulate filter			**68078**
Octavia III Combi (5E5, 5E6) 1.6 TDI 4x4			**2012-15**
CLHA	77	105	
05.2013 ->, After soot particulate filter			**68014**
05.2013 ->, Before soot particulate filter			**68017**
Before catalytic converter, 666 mm., Black			**68048**
Octavia III Combi (5E5, 5E6) 2.0 TDI			**2012-20**
CKFC, CRMB, CYKA, DCYA, DFFA	110	150	
Engine CRMB, Engine CKFC, In front of exhaust turbocharger			**68007**
Octavia III Combi (5E5, 5E6) 2.0 TDI			**2012-17**
CKFB, CRVC	105	143	
In front of exhaust turbocharger, 566 mm., Black			**68007**
Octavia III Combi (5E5, 5E6) 2.0 TDI / TDI RS 4x4			**2014-20**
CUNA, CUPA, DJGA	135	184	
In front of exhaust turbocharger, 566 mm., Black			**68007**
Octavia III Combi (5E5, 5E6) 2.0 TDI 4x4			**2012-20**
CKFC, CRMB, DCYA, DFFA	110	150	
Engine CRMB, Engine CKFC, In front of exhaust turbocharger			**68007**
Octavia III Combi (5E5, 5E6) 2.0 TDI RS			**2013-20**
CUNA, CUPA, DJGA	135	184	
In front of exhaust turbocharger, 566 mm., Black			**68007**
Rapid (NH3, NK3, NK6) 1.6 TDI			**2012-19**
CAYC, CLNA	77	105	
Engine CAYC, Before soot particulate filter			**68021**
Engine CAYC; After soot particulate filter; R.H.D.			**68024**
Engine CAYC; Before soot particulate filter			**68036**
Rapid (NH3, NK3, NK6) 1.6 TDI			**2013-15**
CAYB	66	90	
Before soot particulate filter, 526 mm., Brown			**68021**
After soot particulate filter; 501 mm.; R.H.D.			**68024**
Before soot particulate filter; 426 mm., Brown			**68036**
Rapid Spaceback (NH1) 1.6 TDI			**2012-19**
CAYC, CLNA	77	105	
Engine CAYC			**68021**
Engine CAYC; After soot particulate filter; R.H.D.			**68024**
Engine CAYC; Before soot particulate filter			**68036**
Rapid Spaceback (NH1) 1.6 TDI			**2013-15**
CAYB	66	90	
Before soot particulate filter, 526 mm., Brown			**68021**
After soot particulate filter; 501 mm.; R.H.D.			**68024**
Before soot particulate filter; 426 mm., Brown			**68036**
Roomster (5J7) 1.2 TDI			**2010-15**
CFWA	55	75	
Before soot particulate filter, 526 mm., Brown			**68021**
After soot particulate filter; 501 mm.; R.H.D.			**68024**
After soot particulate filter; 746 mm.			**68035**
Before soot particulate filter; 426 mm., Brown			**68036**
Roomster (5J7) 1.4 TDI			**2006-10**
BMS, BNV	59	80	
Engine BMS, Before soot particulate filter			**68049**
Engine BMS, Exhaust turbocharger			**68056**
Engine BMS, -> Ch. 5J-65012 509			**68058**
-> Ch. 5J-65012 509, Exhaust turbocharger			**68063**
Engine BMS, Ch. 5J-65012 510 ->			**68064**
Roomster (5J7) 1.6 TDI			**2010-15**
CAYB	66	90	
Before soot particulate filter, 526 mm., Brown			**68021**
After soot particulate filter; 501 mm.; R.H.D.			**68024**
After soot particulate filter; 746 mm.			**68035**
-> 09.2010; Before soot particulate filter			**68036**

FAE

SKODA Cont.

Roomster (5J7) 1.6 TDI			**2010-15**
CAYC	77	105	
After soot particulate filter; 501 mm.; R.H.D.			**68024**
After soot particulate filter; 746 mm.			**68035**
-> 09.2010; Before soot particulate filter			**68036**
Roomster (5J7) 1.9 TDI			**2006-10**
BLS, BSW	77	105	
Engine BLS, 11.2006 ->, Before turbocharger			**68001**
Engine BLS, Before soot particulate filter			**68049**
Engine BLS			**68058**
Roomster Praktik (5J) 1.2 TDI			**2010-15**
CFWA	55	75	
After soot particulate filter; 501 mm.; R.H.D.			**68024**
Before soot particulate filter; 426 mm., Brown			**68036**
Roomster Praktik (5J) 1.4 TDI			**2007-10**
BMS, BNV	59	80	
Engine BMS, Before soot particulate filter			**68049**
Engine BMS, Exhaust turbocharger			**68056**
Engine BMS, -> Ch. 5J-65012 509			**68058**
Engine BNV, -> Ch. 5J-65007131, Exhaust turbocharger			**68063**
Engine BMS			**68064**
Roomster Praktik (5J) 1.6 TDI			**2010-15**
CAYB	66	90	
After soot particulate filter; 501 mm.; R.H.D.			**68024**
After soot particulate filter; 746 mm.			**68035**
-> 09.2010; Before soot particulate filter			**68036**
Scala (NW1) 1.6 TDI			**2019 ->**
DGTA	85	116	
Before catalytic converter			**68019**
With factory fitted soot -/particulate filter, 696 mm.			**68059**
Engine DGTA, Euro 6d-Temp, Before soot particulate filter			**68078**
Scala (NW1) 1.6 TDI			**2019 ->**
DGTD	70	95	
Before catalytic converter			**68019**
Superb I (3U4) 2.0 TDI			**2005-08**
BSS	103	140	
Engine BSS			**68062**
Superb II (3T4) 1.6 TDI			**2010-15**
CAYC	77	105	
Before soot particulate filter, 646 mm., Brown			**68002**
After soot particulate filter; 766 mm.			**68003**
Superb II (3T4) 1.9 TDI			**2008-10**
BLS, BXE	77	105	
Engine BLS, -> 09.2010, Ch.3T-8000 001-Ch.3TB300298, Before turbocharger			**68001**
Engine BLS, Ch. 3T-8-000001-Ch. 3T-B-300298; After soot particulate filter			**68005**
Engine BLS, -> 09.2010, Ch.3T8000001-Ch.3TB300298, Before soot particulate filter			**68011**
Superb II (3T4) 2.0 TDI			**2008-10**
BMP	103	140	
-> 03.2010, Ch. 3T-8-000 001 - Ch. 3T-A-300 740, Before turbocharger			**68001**
Ch. 3T-8-000001 - Ch. 3T-A-300748; After soot particulate filter			**68005**
Before soot particulate filter, 446 mm., Brown			**68011**
Superb II (3T4) 2.0 TDI			**2008-15**
CBBB, CFGB	125	170	
Engine CBBB, Ch. 3T-9-006 001 - Ch. 3T-A-301 909, Before turbocharger			**68001**
Engine CBBB, Before soot particulate filter			**68002**
Engine CBBB, After soot particulate filter			**68003**
Superb II (3T4) 2.0 TDI 4x4			**2008-15**
CBBB, CFGB	125	170	
-> 05.2010, Ch. 3T-9-013 039 - Ch. 3T-A-301 909, Before turbocharger			**68001**
CBBB, -> 05.2010, Ch.3T-9-013039-Ch.3T-A-301909, Before soot particulate filter			**68002**
Engine CBBB, After soot particulate filter			**68003**
Superb II Estate (3T5) 1.6 TDI			**2010-15**
CAYC	77	105	
Before soot particulate filter, 646 mm., Brown			**68002**
After soot particulate filter; 766 mm.			**68003**
Superb II Estate (3T5) 1.9 TDI			**2009-10**
BLS, BXE	77	105	
Engine BLS, -> 09.2010, Ch.3T8000001-Ch.3TB300298, Before turbocharger			**68001**
Engine BLS, Ch. 3T-8-000001-Ch. 3T-A-300298; After soot particulate filter			**68005**
Engine BLS, Ch.3T-8-000 001-Ch.3T-B-300 298, Before soot particulate filter			**68011**
Superb II Estate (3T5) 2.0 TDI			**2009-15**
CBBB, CFGB	125	170	
Engine CBBB, -> 05.2010, Ch.3T-A-011 457-Ch.3T-A-301 909, Before turbocharger			**68001**
Engine CBBB, Before soot particulate filter			**68002**
Engine CBBB, After soot particulate filter			**68003**
Superb II Estate (3T5) 2.0 TDI			**2009-10**
BMP	103	140	
Ch. 3T-A-011 457 - Ch. 3T-A-300 740, Before turbocharger			**68001**
Ch. 3T-A-300740 ->; After soot particulate filter			**68005**
Before soot particulate filter, 446 mm., Brown			**68011**

SKODA Cont.

Superb II Estate (3T5) 2.0 TDI 4x4			**2009-15**
CBBB, CFGB	125	170	
Engine CBBB, -> 05.2010, Before turbocharger			**68001**
CBBB, -> 05.2010, Ch.3T-A-011457-Ch.3T-A-301909, Before soot particulate filter			**68002**
Engine CBBB, After soot particulate filter			**68003**
Superb III (3V3) 1.6 TDI			**2015 ->**
DCXA, DCZA	88	120	
Engine DCZA, Product Nr.1E0, Model 2016 ->, Before soot particulate filter			**68013**
05.2015 ->, Before catalytic converter			**68019**
With urea injection, With factory fitted soot -/particulate filter, 696 mm.			**68059**
DCZA, Ch.NP-F7000 001 ->, Euro 6c, Euro 6d-Temp, Before soot particulate filter			**68078**
Engine DCXA, Ch. NP-F7000 001 ->, Before soot particulate filter			**68078**
Superb III (3V3) 2.0 TDI			**2015 ->**
CRLB, DFEA, DFGA, DSRA, DSRB, DTSA, DTSB	110	150	
Engine CRLB, In front of exhaust turbocharger			**68007**
Superb III (3V3) 2.0 TDI 4x4			**2015 ->**
CRLB, DFEA, DFGA	110	150	
Engine CRLB, In front of exhaust turbocharger			**68007**
Superb III Estate (3V5) 1.6 TDI			**2015 ->**
DCXA, DCZA	88	120	
Engine DCXA, Product Nr.1E0, Model 2016 ->, Before soot particulate filter			**68013**
05.2015 ->, Before catalytic converter			**68019**
With urea injection, With factory fitted soot -/particulate filter, 696 mm.			**68059**
Engine DCXA, Engine DCZA, Ch.NP-F7000 001 ->, Before soot particulate filter			**68078**
Superb III Estate (3V5) 2.0 TDI			**2015 ->**
CRLB, DFEA, DFGA, DSRA, DSRB, DTSA, DTSB	110	150	
Engine CRLB, In front of exhaust turbocharger			**68007**
Superb III Estate (3V5) 2.0 TDI 4x4			**2015 ->**
CRLB, DFEA, DFGA	110	150	
In front of exhaust turbocharger, 566 mm., Black			**68007**
Yeti (5L) 1.6 TDI			**2010-15**
CAYC	77	105	
Before soot particulate filter, 646 mm., Brown			**68002**
After soot particulate filter; 766 mm.			**68003**
Yeti (5L) 2.0 TDI 4x4			**2009-17**
CBDB, CFHC, CLCB	103	140	
Engine CBDB, Before soot particulate filter			**68002**
Engine CBDB, After soot particulate filter			**68003**
Yeti (5L) 2.0 TDI 4x4			**2009-15**
CEGA, CFJA	125	170	
Engine CEGA, -> 05.2010, Ch.5L-A-017 984-Ch.5L-B-700 022, Before turbocharger			**68001**
Engine CEGA, Before soot particulate filter			**68002**
Engine CEGA, After soot particulate filter			**68003**

VAUXHALL

Insignia Mk I (A) Country Tourer (G09) 2.0 CDTI (47)			**2013-17**
A 20 DTH	120	163	
Rear			**68082**
Insignia Mk I (A) Country Tourer (G09) 2.0 CDTI (47)			**2013-17**
A 20 DTH	120	163	
Rear			**68082**
Insignia Mk I (A) Fastback (G09) 2.0 CDTI (68)			**2013-17**
A 20 DTH	120	163	
Rear			**68082**
Insignia Mk I (A) Fastback (G09) 2.0 CDTI (68)			**2008-17**
A 20 DTC, A 20 DTL	81	110	
Rear			**68082**
Insignia Mk I (A) Fastback (G09) 2.0 CDTI (68)			**2013-17**
A 20 DTE	103	140	
Rear			**68082**
Insignia Mk I (A) Fastback (G09) 2.0 CDTI (68)			**2008-14**
A 20 DT, A 20 DTJ	96	130	
Rear			**68082**
Insignia Mk I (A) Fastback (G09) 2.0 CDTI (68)			**2008-17**
A 20 DTH	118	160	
11.2008 ->, Rear			**68082**
Insignia Mk I (A) Fastback (G09) 2.0 CDTI (68)			**2012-16**
A 20 DTE	88	120	
Rear			**68082**
Insignia Mk I (A) Fastback (G09) 2.0 CDTI 4x4 (68)			**2008-17**
A 20 DTH	118	160	
Rear			**68082**
Insignia Mk I (A) Sedan (G09) 2.0 CDTI (69)			**2013-17**
A 20 DTH	120	163	
Rear			**68082**
Insignia Mk I (A) Sedan (G09) 2.0 CDTI (69)			**2008-14**
A 20 DT, A 20 DTJ	96	130	
Rear			**68082**
Insignia Mk I (A) Sedan (G09) 2.0 CDTI (69)			**2008-17**
A 20 DTH	118	160	
11.2008 ->, Rear			**68082**

VAUXHALL Cont.

Insignia Mk I (A) Sedan (G09) 2.0 CDTI 4x4 (69)			**2008-17**
A 20 DTH	118	160	
Rear			**68082**
Insignia Mk I (A) Sports Tourer (G09) 2.0 CDTI (35)			**2008-17**
A 20 DTC	81	110	
Rear			**68082**
Insignia Mk I (A) Sports Tourer (G09) 2.0 CDTI (35)			**2013-17**
A 20 DTH	120	163	
Rear			**68082**
Insignia Mk I (A) Sports Tourer (G09) 2.0 CDTI (35)			**2008-14**
A 20 DT, A 20 DTJ	96	130	
Rear			**68082**
Insignia Mk I (A) Sports Tourer (G09) 2.0 CDTI (35)			**2008-17**
A 20 DTH	118	160	
02.2009 ->, Rear			**68082**
Insignia Mk I (A) Sports Tourer (G09) 2.0 CDTI (35)			**2013-17**
A 20 DTE	103	140	
Rear			**68082**
Insignia Mk I (A) Sports Tourer (G09) 2.0 CDTI (35)			**2012-16**
A 20 DTE	88	120	
Rear			**68082**
Insignia Mk I (A) Sports Tourer (G09) 2.0 CDTI 4x4 (35)			**2008-17**
A 20 DTH	118	160	
06.2010 ->, Rear			**68082**
Signum (Z03) 3.0 V6 CDTI			**2005-08**
Z 30 DT	135	184	
After soot particulate filter, 1560 mm., Black			**68038**
Vectra Mk II (C) (Z02) 3.0 CDTi			**2005-08**
Z 30 DT	135	184	
After soot particulate filter, 1560 mm., Black			**68038**
Vectra Mk II (C) Estate (Z02) 3.0 CDTi			**2005-08**
Z 30 DT	135	184	
After soot particulate filter, 1560 mm., Black			**68038**
Vectra Mk II (C) GTS (Z02) 3.0 CDTi			**2005-08**
Z 30 DT	135	184	
After soot particulate filter, 1560 mm., Black			**68038**

VOLVO

C30 (533) D5			**2006-12**
D 5244 T13, D 5244 T8	132	180	
Engine D 5244 T8, Before soot particulate filter, -> 03.2010			**68067**
C30 (533) D5			**2006-12**
D 5244 T9	120	163	
Before soot particulate filter, -> 12.2010			**68067**
C70 II Cabriolet (542) 2.4 D			**2007-13**
D 5244 T9	120	163	
After catalytic converter			**68067**
C70 II Cabriolet (542) D5			**2006-13**
D 5244 T13, D 5244 T8	132	180	
After soot particulate filter, -> 10.2007			**68067**
S40 II (544) 2.4 D5			**2006-10**
D 5244 T13, D 5244 T8	132	179	
Engine D 5244 T8, After soot particulate filter, -> 04.2010			**68067**
S80 II (124) 2.4 D			**2006-11**
D 5244 T19, D 5244 T5	120	163	
Engine D 5244 T5, After soot particulate filter, -> 04.2009			**68067**
S80 II (124) D5			**2006-09**
D 5244 T4	136	185	
After soot particulate filter, -> 12.2008			**68067**
S80 II (124) D5			**2010-11**
D 5244 T10	151	205	
After soot particulate filter			**68067**
S80 II (124) D5 AWD			**2011-15**
D 5244 T15	158	215	
After soot particulate filter, -> 10.2013			**68067**
S80 II (124) D5 AWD			**2007-09**
D 5244 T4	136	185	
After soot particulate filter, 01.2008 - 04.2009			**68067**
S80 II (124) D5 AWD			**2010-11**
D 5244 T10	151	205	
After soot particulate filter, -> 04.2011			**68067**
V50 (545) 2.4 D5			**2006-10**
D 5244 T13, D 5244 T8	132	179	
After soot particulate filter, 10.2007 - 04.2010			**68067**
V50 (545) 2.4 Tdi			**2007-10**
D 5244 T9	120	163	
After soot particulate filter			**68067**
V60 I (155) D4 AWD			**2013-15**
D 5244 T12	133	181	
PTC, 422 mm., Black			**68067**
V60 I (155) D4 AWD			**2012-15**
D 5244 T17	120	163	
After soot particulate filter, -> 10.2013			**68067**

VOLVO Cont.

V60 I (155) D5			**2014-15**
D 5244 T23	169	230	
Before soot particulate filter			**68067**
V60 I (155) D5			**2010-11**
D 5244 T10	151	205	
After soot particulate filter			**68067**
V60 I (155) D5 AWD			**2010-11**
D 5244 T10	151	205	
After soot particulate filter			**68067**
V60 I (155, 157) 2.4 D5 AWD			**2011-15**
D 5244 T15	158	215	
After soot particulate filter, -> 10.2013			**68067**
V60 I (155, 157) 2.4 Hybrid D6 AWD			**2012-15**
D82PHEV	158	215	
After soot particulate filter, -> 10.2013			**68067**
V70 III (135) 2.4 D			**2007-10**
D 5244 T19, D 5244 T5	120	163	
After soot particulate filter, -> 04.2009			**68067**
V70 III (135) 2.4 D			**2009-10**
D 5244 T14	129	175	
After soot particulate filter, -> 10.2009			**68067**
V70 III (135) D5			**2011-15**
D 5244 T11, D 5244 T15	158	215	
Engine D 5244 T15, After soot particulate filter, -> 04.2013			**68067**
V70 III (135) D5			**2007-09**
D 5244 T4	136	185	
After soot particulate filter, -> 04.2009			**68067**
V70 III (135) D5			**2008-11**
D 5244 T10	151	205	
After soot particulate filter			**68067**
V70 III (135) D5 AWD			**2011-15**
D 5244 T15	158	215	
After soot particulate filter, -> 10.2013			**68067**
V70 III (135) D5 AWD			**2007-09**
D 5244 T4	136	185	
After soot particulate filter, -> 04.2009			**68067**
V70 III (135) D5 AWD			**2009-11**
D 5244 T10	151	205	
After soot particulate filter			**68067**
XC60 I SUV (156) 2.0 T			**2009-12**
B 4204 T6	149	203	
-> 12.2011			**68067**
XC60 I SUV (156) 2.4 D			**2009-10**
D 5244 T14	129	175	
For soot particulate filter			**68067**
XC60 I SUV (156) 2.4 D / D3 / D4 AWD			**2008-17**
D 5244 T16, D 5244 T17, D 5244 T5	120	163	
Engine D 5244 T17, Before soot particulate filter			**68067**
XC60 I SUV (156) D3 / D4			**2010-14**
D 5204 T2, D 5204 T3	120	163	
After soot particulate filter, -> 07.2013			**68067**
XC60 I SUV (156) D4 AWD			**2013-15**
D 5244 T12	133	181	
Before soot particulate filter			**68067**
XC60 I SUV (156) D4 AWD			**2015-17**
D 5244 T21	140	190	
Before soot particulate filter			**68067**
XC60 I SUV (156) D5 AWD			**2011-15**
D 5244 T11, D 5244 T15	158	215	
Engine D 5244 T15, For soot particulate filter, 10.2013 ->			**68067**
XC60 I SUV (156) D5 AWD			**2014-15**
D 5244 T23	169	230	
Before soot particulate filter			**68067**
XC60 I SUV (156) D5 AWD			**2015-17**
D 5244 T20, D 5244 T22	162	220	
Engine D 5244 T22, Before soot particulate filter			**68067**
XC60 I SUV (156) D5 AWD			**2008-09**
D 5244 T4	136	185	
For soot particulate filter, -> 04.2009			**68067**
XC60 I SUV (156) T5			**2010-17**
B 4204 T7	177	241	
-> 07.2013			**68067**
XC70 II (136) 2.4 D			**2009-10**
D 5244 T14	129	175	
After soot particulate filter			**68067**
XC70 II (136) 2.4 D / D4 AWD			**2007-16**
D 5244 T16, D 5244 T17, D 5244 T5	120	163	
Engine D 5244 T16, After soot particulate filter, -> 04.2011			**68067**
XC70 II (136) D4 AWD			**2013-16**
D 5244 T12	133	181	
After soot particulate filter, -> 03.2014			**68067**
XC70 II (136) D5 AWD			**2011-15**
D 5244 T11, D 5244 T15	158	215	
Engine D 5244 T15, After soot particulate filter, -> 10.2013			**68067**

VOLVO Cont.

XC70 II (136) D5 AWD			**2007-09**
D 5244 T4	136	185	
After soot particulate filter			**68067**
XC70 II (136) D5 AWD			**2009-11**
D 5244 T10	151	205	
After soot particulate filter, -> 05.2010			**68067**

VOLKSWAGEN

Arteon (3H7, 3H8) 2.0 TDI			**2017 ->**
DBGA, DFGA, DSRA, DSRB, DTSA, DTSB	110	150	
In front of exhaust turbocharger, 566 mm., Black			**68007**
Arteon (3H7, 3H8) 2.0 TDI 4motion			**2017-20**
CUAA	176	240	
After soot particulate filter			**68030**
Beetle (5C1, 5C2) I Bjalla 1.6 TDI			**2011-16**
CAYC	77	105	
Before soot particulate filter, 646 mm., Brown			**68002**
After soot particulate filter; 766 mm.			**68003**
Beetle (5C1, 5C2) I Bjalla 2.0 TDI			**2014-18**
CUUB, CVCA, DELA	110	150	
Engine CVCA, In front of exhaust turbocharger			**68007**
Beetle Cabriolet (5C7, 5C8) 1.6 TDI			**2011-16**
CAYC	77	105	
Before soot particulate filter, 646 mm., Brown			**68002**
After soot particulate filter; 766 mm.			**68003**
Caddy Alltrack Monospace (SAB) 1.6 TDI			**2015-17**
CAYE	55	75	
Before soot particulate filter, 706 mm., Brown			**68045**
Caddy Alltrack Monospace (SAB) 1.6 TDI			**2015 ->**
CAYD	75	102	
Before soot particulate filter, 706 mm., Brown			**68045**
Caddy Alltrack Van/MPV (SAA) 1.6 TDI			**2015 ->**
CAYD	75	102	
Before soot particulate filter, 706 mm., Brown			**68045**
Caddy III Monospace (2KB, 2KJ, 2CB, 2CJ) 1.6 TDI			**2010-15**
CAYE	55	75	
Before soot particulate filter, 706 mm., Brown			**68045**
After soot particulate filter, 876 mm.			**68057**
Caddy III Monospace (2KB, 2KJ, 2CB, 2CJ) 1.6 TDI			**2010-15**
CAYD	75	102	
Before soot particulate filter, 706 mm., Brown			**68045**
After soot particulate filter, 876 mm.			**68057**
Caddy III Monospace (2KB, 2KJ, 2CB, 2CJ) 1.9 TDI			**2004-10**
BJB, BLS	77	105	
Engine BLS, 11.2005 ->, Ch.2K6048671-Ch.2KB040000, Before turbocharger			**68001**
Engine BLS, 11.2005 ->, Ch. 2K-6-048 671 - Ch. 2K-B-040 000			**68016**
Engine BLS, After soot particulate filter			**68028**
Caddy III Monospace (2KB, 2KJ, 2CB, 2CJ) 1.9 TDI			**2005-10**
BSU	55	75	
05.2007 ->, Ch. 2K-8-000 001 - Ch. 2K-B-040 000, Before turbocharger			**68001**
Engine BSU, 05.2007 ->, Ch. 2K-8-000 001 - Ch. 2K-B-040 000			**68016**
After soot particulate filter, 876 mm.			**68028**
Caddy III Monospace (2KB, 2KJ, 2CB, 2CJ) 1.9 TDI 4motion			**2008-10**
BLS	77	105	
11.2008 ->, Ch. 2K-9-072 349 - Ch. 2K-B-040 000, Before turbocharger			**68001**
Engine BLS, 11.2008 ->, Ch. 2K-9-072 349 - Ch. 2K-B-040 000			**68016**
After soot particulate filter, 876 mm.			**68028**
Caddy III Monospace (2KB, 2KJ, 2CB, 2CJ) 2.0 TDI			**2007-10**
BMM	103	140	
Ch. 2K-8-035 370 - Ch. 2K-B-040 000, Before turbocharger			**68001**
Engine BMM, Ch. 2K-8-035 370 - Ch. 2K-B-040 000			**68016**
After soot particulate filter, 876 mm.			**68028**
Caddy III Van/MPV (2KA, 2KH, 2CA, 2CH) 1.6 TDI			**2010-15**
CAYE	55	75	
Before soot particulate filter, 706 mm., Brown			**68045**
After soot particulate filter, 876 mm.			**68057**
Caddy III Van/MPV (2KA, 2KH, 2CA, 2CH) 1.6 TDI			**2010-15**
CAYD	75	102	
Before soot particulate filter, 706 mm., Brown			**68045**
After soot particulate filter, 876 mm.			**68057**
Caddy III Van/MPV (2KA, 2KH, 2CA, 2CH) 1.9 TDI			**2004-10**
BJB, BLS	77	105	
Engine BLS, 11.2005 ->, Ch.2K6048671-Ch.2KB040000, Before turbocharger			**68001**
Engine BLS, 11.2005 ->, Ch. 2K-6-048 671 - Ch. 2K-B-040 000			**68016**
Engine BLS, After soot particulate filter			**68028**
Caddy III Van/MPV (2KA, 2KH, 2CA, 2CH) 1.9 TDI			**2005-10**
BSU	55	75	
05.2007 ->, Ch. 2K-8-000 001 - Ch. 2K-B-040 000, Before turbocharger			**68001**
Engine BSU, 05.2007 ->, Ch. 2K-8-000 001 - Ch. 2K-B-040 000			**68016**
After soot particulate filter, 876 mm.			**68028**

VOLKSWAGEN Cont.

Caddy III Van/MPV (2KA, 2KH, 2CA, 2CH) 1.9 TDI 4motion			**2008-10**
BLS	77	105	
Ch. 2K-9-072 349 - Ch. 2K-B-040 000, Before turbocharger			**68001**
Engine BLS, Ch. 2K-9-072 349 - Ch. 2K-B-040 000			**68016**
After soot particulate filter, 876 mm.			**68028**
Caddy III Van/MPV (2KA, 2KH, 2CA, 2CH) 2.0 TDI			**2007-10**
BMM	103	140	
Ch. 2K-8-035 370 - Ch. 2K-B-040 000, Before turbocharger			**68001**
Engine BMM, Ch. 2K-8-035 370 - Ch. 2K-B-040 000			**68016**
After soot particulate filter, 876 mm.			**68028**
Caddy IV Monospace (SAB, SAJ) 1.6 TDI			**2015-17**
CAYE	55	75	
Before soot particulate filter, 706 mm., Brown			**68045**
Caddy IV Monospace (SAB, SAJ) 1.6 TDI			**2015-20**
CAYD	75	102	
Before soot particulate filter, 706 mm., Brown			**68045**
Caddy IV Van/MPV (SAA, SAH) 1.6 TDI			**2015-17**
CAYE	55	75	
Before soot particulate filter, 706 mm., Brown			**68045**
Caddy IV Van/MPV (SAA, SAH) 1.6 TDI			**2015-20**
CAYD	75	102	
Before soot particulate filter, 706 mm., Brown			**68045**
Crafter Platform/Chassis (SZ) 2.0 TDI			**2016 ->**
DAUB, DNAD	75	102	
Engine DAUB, With factory fitted soot -/particulate filter, 696 mm.			**68059**
Crafter Platform/Chassis (SZ) 2.0 TDI			**2016 ->**
DAUA, DNAE	103	140	
Engine DAUA, With factory fitted soot -/particulate filter, 696 mm.			**68059**
Crafter Platform/Chassis (SZ) 2.0 TDI			**2016 ->**
DAVA, DMZB	130	177	
Engine DAVA, With factory fitted soot -/particulate filter, 696 mm.			**68059**
Crafter Platform/Chassis (SZ) 2.0 TDI 4motion			**2017 ->**
DAUA, DNAE	103	140	
Engine DAUA, With factory fitted soot -/particulate filter, 696 mm.			**68059**
Crafter Platform/Chassis (SZ) 2.0 TDI 4motion			**2017 ->**
DAVA, DMZB	130	177	
Engine DAVA, With factory fitted soot -/particulate filter, 696 mm.			**68059**
Crafter Van (SY, SX) 2.0 TDI			**2016 ->**
DAUB, DNAD	75	102	
Engine DAUB, With factory fitted soot -/particulate filter, 696 mm.			**68059**
Crafter Van (SY, SX) 2.0 TDI			**2016 ->**
DAUA, DNAE	103	140	
Engine DAUA, With factory fitted soot -/particulate filter, 696 mm.			**68059**
Crafter Van (SY, SX) 2.0 TDI			**2016 ->**
DAVA, DMZB	130	177	
Engine DAVA, With factory fitted soot -/particulate filter, 696 mm.			**68059**
Crafter Van (SY, SX) 2.0 TDI 4motion			**2017 ->**
DAVA, DMZB	130	177	
Engine DAVA, With factory fitted soot -/particulate filter, 696 mm.			**68059**
Crafter Van (SY, SX) 2.0 TDI 4motion			**2017 ->**
DAUA, DNAE	103	140	
Engine DAUA, With factory fitted soot -/particulate filter, 696 mm.			**68059**
Eos (1F7, 1F8) 2.0 TDI			**2006-08**
BMM	103	140	
Ch. 1F-6-000 001 - Ch. 1F-8-060 000, Before turbocharger			**68001**
Ch. 1F-6-000001 - Ch. 1F-8-060000; After soot particulate filter			**68005**
Ch. 1F-6-000 001 - Ch. 1F-8-060 000, Before soot particulate filter			**68011**
Eos (1F7, 1F8) 2.0 TDI 16V			**2008-15**
CBAB, CFFB	103	140	
Engine CBAB, Before soot particulate filter			**68002**
Engine CBAB, After soot particulate filter			**68003**
Golf Alltrack VII Variant (BA5, BV5) 1.6 TDI 4motion			**2014-17**
CRKB, CXXB	81	110	
PR 7MM, Euro 6, Before soot particulate filter			**68013**
Engine CRKB, After soot particulate filter			**68014**
Engine CRKB, Before soot particulate filter			**68017**
Engine CXXB, -> 03.2017, Before catalytic converter			**68019**
Golf Alltrack VII Variant (BA5, BV5) 2.0 TDI 4motion			**2014-18**
CRBC, CRLB, DCYA	110	150	
Engine CRBC, Engine CRLB, In front of exhaust turbocharger			**68007**
Golf Alltrack VII Variant (BA5, BV5) 2.0 TDI 4motion			**2014-20**
CUNA, DGCA, DJGA	135	184	
Engine CUNA, In front of exhaust turbocharger			**68007**
Golf Plus V (5M1, 521) 1.6 TDI			**2009-13**
CAYC	77	105	
Before soot particulate filter, 646 mm., Brown			**68002**
After soot particulate filter; 766 mm.			**68003**
Golf Plus V (5M1, 521) 1.6 TDI			**2009-13**
CAYB	66	90	
Before soot particulate filter, 646 mm., Brown			**68002**
After soot particulate filter; 766 mm.			**68003**

FAE

VOLKSWAGEN Cont.

Golf Plus V (5M1, 521) 1.9 TDI			**2005-09**
BKC, BLS, BXE	77	105	
BLS, 06.2005 ->, Ch.1K6000001-Ch.1K9900000, Before turbocharger			**68001**
BLS, 06.2005-12.2008, Ch.1K6000001-Ch.1K9900000; After soot particulate filter			**68005**
BLS, Ch.1K6000001-Ch.1K9900000, Before soot particulate filter			**68011**
Golf Plus V (5M1, 521) 1.9 TDI			**2005-08**
BRU, BXF, BXJ	66	90	
Engine BXJ, 11.2007 ->, Ch.1K85489110-Ch.1K9900000, Before turbocharger			**68001**
Engine BXJ, 11.2007 ->, Ch.1K8548110-Ch.1K9900000; After soot particulate filter			**68005**
BXJ, 11.2007 ->, Ch.1K8548110-Ch.1K9900000, Before soot particulate filter			**68011**
Golf Plus V (5M1, 521) 2.0 TDI			**2005-13**
AZV, CBDA, CFHB	100	136	
Engine CBDA, Before soot particulate filter			**68002**
Engine CBDA, After soot particulate filter			**68003**
Golf Plus V (5M1, 521) 2.0 TDI			**2005-11**
BMM	103	140	
-> 12.2008, Ch. 1K-6-578 037 - Ch. 1K-9-900 000, Before turbocharger			**68001**
Ch. 1K-6-578037 - Ch. 1K-9-900000; After soot particulate filter			**68005**
-> 12.2008, Ch.1K-6-578037-Ch.1K-9-900000, Before soot particulate filter			**68011**
Golf Plus V (5M1, 521) 2.0 TDI			**2005-07**
BEE	96	131	
After soot particulate filter; 766 mm.			**68005**
Golf Plus V (5M1, 521) 2.0 TDI			**2009-13**
CBDC, CLCA	81	110	
Engine CBDC, Before soot particulate filter			**68002**
After soot particulate filter; 766 mm.			**68003**
Golf Plus V (5M1, 521) 2.0 TDI 16V			**2005-13**
BKD, CBDB, CFHC	103	140	
Engine CBDB, Before soot particulate filter			**68002**
Engine CBDB, After soot particulate filter			**68003**
Golf Sportsvan VII (AM1, AN1) 1.6 TDI			**2014-16**
CRKB, CXXB, DBKA	81	110	
Engine CXXB, Before soot particulate filter			**68013**
Engine CRKB, 05.2014 ->, After soot particulate filter			**68014**
Engine CRKB, Before soot particulate filter			**68017**
Engine DBKA, Engine CXXB, 11.2014 - 11.2017, Before catalytic converter			**68019**
Engine CRKB, Before catalytic converter			**68048**
Golf Sportsvan VII (AM1, AN1) 1.6 TDI			**2014-18**
CRKA, CXXA, DDYB	66	90	
Engine CXXA, Before soot particulate filter			**68013**
Engine CRKA, After soot particulate filter			**68014**
Engine CRKA, Before soot particulate filter			**68017**
Engine CXXA, 11.2014 - 10.2016, Before catalytic converter			**68019**
Engine CRKA, Before catalytic converter			**68048**
Golf Sportsvan VII (AM1, AN1) 1.6 TDI			**2016-20**
DDYA, DGTE	85	115	
Engine DGTE, 07.2018 - 08.2020, Before catalytic converter			**68019**
Engine DGTE, With factory fitted soot -/particulate filter, 696 mm.			**68059**
Engine DGTE, Before soot particulate filter			**68078**
Golf Sportsvan VII (AM1, AN1) 2.0 TDI			**2014-20**
CRLB, DCYA, DFGA	110	150	
Engine CRLB, Engine DCYA, In front of exhaust turbocharger			**68007**
Golf V (1K1) 1.9 TDI			**2003-08**
BKC, BLS, BXE	77	105	
Engine BLS, 06.2005 ->, Ch.1K6000001-Ch.1K9199 999, Before turbocharger			**68001**
Engine BLS, 06.2005 ->, Ch.1K6000001-Ch.1K9199999; After soot particulate filter			**68005**
BLS, 06.2005 ->, Ch.1K6000001-Ch.1K9199999, Before soot particulate filter			**68011**
Golf V (1K1) 1.9 TDI			**2004-08**
BRU, BXF, BXJ	66	90	
Engine BXJ, Ch. 1K-8-010 984 - Ch. 1K-9-199 999, Before turbocharger			**68001**
BXJ, 11.2007 ->, Ch.1K8010984-Ch.1K9199999; After soot particulate filter			**68005**
Engine BXJ, 11.2007 ->, Ch.1K8010984-Ch.1K9199999, Before soot particulate filter			**68011**
Golf V (1K1) 1.9 TDI 4motion			**2004-08**
BKC, BLS, BXE	77	105	
Engine BLS, 04.2006 ->, Ch.1K6027316-Ch.1K9199999; After soot particulate filter			**68005**
Engine BLS, 04.2006 ->, Ch.1K6027316-Ch.1K9199999, Before soot particulate filter			**68011**
Golf V (1K1) 2.0 TDI			**2005-08**
BMN	125	170	
Ch. 1K-6-013 012 - Ch. 1K-9-199 999, Before turbocharger			**68001**
Ch. 1K-6-013012 - Ch. 1K-9-199999; After soot particulate filter			**68005**
Ch. 1K-6-013 012 - Ch. 1K-9-199 999, Before soot particulate filter			**68011**
Golf V (1K1) 2.0 TDI			**2003-08**
AZV	100	136	
Before soot particulate filter, 646 mm., Brown			**68002**
Golf V (1K1) 2.0 TDI			**2004-08**
BMM	103	140	
11.2005 ->, Ch. 1K-6-013 012 - Ch. 1K-9-199 999, Before turbocharger			**68001**
11.2005 ->, Ch. 1K-6-013012-Ch. 1K-9-199999; After soot particulate filter			**68005**
11.2005 ->, Ch.1K-6-013 012-Ch.1K-9-199 999, Before soot particulate filter			**68011**
Golf V (1K1) 2.0 TDI 4motion			**2007-08**
BMM	103	140	
Ch. 1K-6-013 012 - Ch. 1K-9-199 999, Before turbocharger			**68001**
Ch. 1K-6-013012 - Ch. 1K-9-199999; After soot particulate filter			**68005**
Ch. 1K-6-013 012 - Ch. 1K-9-199 999, Before soot particulate filter			**68011**

VOLKSWAGEN Cont.

Golf V Variant (1K5) 1.9 TDI			**2007-09**
BLS, BXE	77	105	
Engine BLS, Ch. 1K-7-300 001 - Ch. 1K-9-370 000, Before turbocharger			**68001**
Engine BLS, -> 06.2009, Ch.1K7300001-Ch.1K9370000; After soot particulate filter			**68005**
Engine BLS, Ch.1K-7-300 001-Ch.1K-9-370 000, Before soot particulate filter			**68011**
Golf V Variant (1K5) 1.9 TDI 4motion			**2008-09**
BLS	77	105	
Ch. 1K-8-335 097 - Ch. 1K-9-370 000, Before turbocharger			**68001**
Ch. 1K-8-335 097 - Ch. 1K-9-370 000, Before soot particulate filter			**68011**
Golf V Variant (1K5) 2.0 TDI			**2007-09**
BMM	103	140	
Ch. 1K-7-300 001 - Ch. 1K-9-370 000, Before turbocharger			**68001**
-> 06.2009; After soot particulate filter			**68005**
Ch. 1K-7-300 001 - Ch. 1K-9-370 000, Before soot particulate filter			**68011**
Golf V Variant (1K5) 2.0 TDI 16V			**2007-09**
BKD, CBDB	103	140	
Engine CBDB, Before soot particulate filter			**68002**
Engine CBDB, After soot particulate filter			**68003**
Golf Van VII Variant (BA5) 1.6 TDi BlueMotion			**2013-17**
CLHB, CRKA, CXXA	66	90	
Engine CXXA, 11.2014 ->, Before catalytic converter			**68019**
Golf Van VII Variant (BA5) 2.0 TDi BlueMotion			**2013-17**
CRBC, CRLB	110	150	
In front of exhaust turbocharger, 566 mm., Black			**68007**
Golf Van VII Variant (BA5) 2.0 TDi BlueMotion 4motion			**2013-17**
CRBC, CRLB	110	150	
In front of exhaust turbocharger, 566 mm., Black			**68007**
Golf VI (5K1) 1.6 TDI			**2009-12**
CAYC	77	105	
Before soot particulate filter, 646 mm., Brown			**68002**
After soot particulate filter; 766 mm.			**68003**
Golf VI (5K1) 1.6 TDI			**2009-12**
CAYB	66	90	
Before soot particulate filter, 646 mm., Brown			**68002**
After soot particulate filter; 766 mm.			**68003**
Golf VI (5K1) 2.0 TDI			**2008-13**
CBAB, CFFB, CJAA	103	140	
Engine CBAB, Before soot particulate filter			**68002**
Engine CBAB, After soot particulate filter			**68003**
Golf VI (5K1) 2.0 TDI			**2008-12**
CBDC, CLCA	81	110	
Engine CBDC, Before soot particulate filter			**68002**
After soot particulate filter; 766 mm.			**68003**
Golf VI (5K1) 2.0 TDI			**2009-12**
CBBB, CFGB	125	170	
Engine CBBB, -> 05.2010, Ch.1K-9-400 341-Ch.1K-A-400 000, Before turbocharger			**68001**
Engine CBBB, Before soot particulate filter			**68002**
Engine CBBB, After soot particulate filter			**68003**
Golf VI (5K1) 2.0 TDI			**2008-12**
CBAA, CFFA	100	136	
Engine CBAA, Before soot particulate filter			**68002**
Engine CBAA, After soot particulate filter			**68003**
Golf VI (5K1) 2.0 TDI 4motion			**2009-12**
CBAB, CFFB	103	140	
Engine CBAB, -> 11.2009, Before soot particulate filter			**68002**
Engine CBAB, After soot particulate filter			**68003**
Golf VI Cabriolet (517) 1.6 TDI			**2011-16**
CAYC	77	105	
Before soot particulate filter, 646 mm., Brown			**68002**
After soot particulate filter; 766 mm.			**68003**
Golf VI Variant (AJ5) 1.6 TDI			**2009-13**
CAYC	77	105	
Before soot particulate filter, 646 mm., Brown			**68002**
After soot particulate filter; 766 mm.			**68003**
Golf VI Variant (AJ5) 1.6 TDI			**2009-13**
CAYB	66	90	
Before soot particulate filter, 646 mm., Brown			**68002**
After soot particulate filter; 766 mm.			**68003**
Golf VI Variant (AJ5) 1.6 TDI 4motion			**2009-13**
CAYC	77	105	
11.2009 ->, Before soot particulate filter			**68002**
After soot particulate filter; 766 mm.			**68003**
Golf VI Variant (AJ5) 2.0 TDI			**2009-13**
CBDB, CFHC, CJAA	103	140	
Engine CBDB, Before soot particulate filter			**68002**
Engine CBDB, After soot particulate filter			**68003**
Golf VI Variant (AJ5) 2.0 TDI			**2009-13**
CBDA, CFHB	100	136	
Engine CBDA, Before soot particulate filter			**68002**
Engine CBDA, After soot particulate filter			**68003**

FAE

VOLKSWAGEN Cont.

Golf VII (5G1, BQ1, BE1, BE2) 1.6 TDI			**2016-20**
DDYA, DGTE	85	115	
Before catalytic converter			**68019**
Engine DGTE, With factory fitted soot -/particulate filter, 696 mm.			**68059**
Engine DGTE, Ch. BQ1*** ->, Before soot particulate filter			**68078**
Golf VII (5G1, BQ1, BE1, BE2) 1.6 TDI			**2012-17**
CLHA	77	105	
PR 7MM, Euro 6, Before soot particulate filter			**68013**
After soot particulate filter, 666 mm.			**68014**
Ch. AU-D-000 001 - Ch. AU-E-000 001, Before soot particulate filter			**68017**
Golf VII (5G1, BQ1, BE1, BE2) 1.6 TDI			**2013-18**
CLHB, CRKA, CXXA, DDYB	66	90	
PR 7MM, Euro 6, Before soot particulate filter			**68013**
After soot particulate filter, 666 mm.			**68014**
Ch. AU-D-000 001 - Ch. AU-E-000 001, Before soot particulate filter			**68017**
Engine CRKA, 11.2014 - 12.2015, Before catalytic converter			**68019**
Engine CXXA, 08.2014 - 03.2017, Before catalytic converter			**68019**
Engine CRKA, Ch. AU-D-000001 ->, Before catalytic converter			**68048**
Engine CRKA, Ch. AU-E-500001 ->, Before catalytic converter			**68048**
Golf VII (5G1, BQ1, BE1, BE2) 1.6 TDI			**2013-17**
CRKB, CXXB, DBKA	81	110	
PR 7MM, Euro 6, Before soot particulate filter			**68013**
After soot particulate filter, 666 mm.			**68014**
Ch. AU-D-000 001 - Ch. AU-E-000 001, Before soot particulate filter			**68017**
Engine DBKA, 05.2015 - 03.2017, Before catalytic converter			**68019**
Engine CRKB, Engine CXXB, 11.2014 - 03.2017, Before catalytic converter			**68019**
Engine CRKB, Before catalytic converter			**68048**
Golf VII (5G1, BQ1, BE1, BE2) 1.6 TDI 4motion			**2012-17**
CLHA	77	105	
PR 7MM, Euro 6, Before soot particulate filter			**68013**
After soot particulate filter, 666 mm.			**68014**
Ch. AU-D-000 001 - Ch. AU-E-00 001, Before soot particulate filter			**68017**
Golf VII (5G1, BQ1, BE1, BE2) 1.6 TDI 4motion			**2013-17**
CRKB, CXXB	81	110	
PR 7MM, Euro 6, Before soot particulate filter			**68013**
05.2014 ->, After soot particulate filter			**68014**
Ch. AU-D-000 001 - Ch. AU-E-000 001, Before soot particulate filter			**68017**
11.2014 - 03.2017, Before catalytic converter			**68019**
Engine CRKB, Before catalytic converter			**68048**
Golf VII (5G1, BQ1, BE1, BE2) 2.0 GTD			**2013-20**
CUNA, DGCA, DJGA	135	184	
Engine CUNA, In front of exhaust turbocharger			**68007**
Golf VII (5G1, BQ1, BE1, BE2) 2.0 TDI			**2012-20**
CRBC, CRLB, CRMB, CRUA, DCYA, DEJA, DFGA	110	150	
Engine CRBC, Engine DEJA, Engine CRLB, In front of exhaust turbocharger			**68007**
Golf VII (5G1, BQ1, BE1, BE2) 2.0 TDI			**2012-20**
CRVA, CYKB, DCYB, DEJB, DFGB	81	110	
Engine CYKB, In front of exhaust turbocharger			**68007**
Golf VII (5G1, BQ1, BE1, BE2) 2.0 TDI 4motion			**2012-20**
CKFC, CRBC, CRLB, CRMB, DCYA	110	150	
Engine CKFC, Engine CRBC, Engine CRLB, In front of exhaust turbocharger			**68007**
Golf VII Van (5G1) 1.6 TDi BlueMotion			**2013-14**
CRKA	66	90	
11.2014 - 12.2015, Before catalytic converter			**68019**
Golf VII Van (5G1) 1.6 TDi BlueMotion			**2013-17**
CRKB, CXXB	81	110	
11.2014 - 03.2017, Before catalytic converter			**68019**
Golf VII Variant (BA5, BV5) 1.0 TSI			**2016-20**
CHZC	81	110	
Engine CHZC, Before soot particulate filter			**68078**
Golf VII Variant (BA5, BV5) 1.6 TDI			**2016-20**
DDYA, DGTE	85	115	
-> 08.2020, Before catalytic converter			**68019**
Engine DGTE, With factory fitted soot -/particulate filter, 696 mm.			**68059**
Engine DGTE, Engine DDYA, Ch. BV5*** ->, Before soot particulate filter			**68078**
Golf VII Variant (BA5, BV5) 1.6 TDI			**2013-17**
CLHB, CRKA, CXXA, DDYB	66	90	
PR 7MM, Euro 6, Before soot particulate filter			**68013**
After soot particulate filter, 666 mm.			**68014**
Before soot particulate filter, 881 mm., Brown			**68017**
Engine CXXA, 11.2014 ->, Before catalytic converter			**68019**
Engine CRKA, Ch. AU-E-500001 ->, Before catalytic converter			**68048**
Engine CRKA, Ch. AU-D-000001 ->, Before catalytic converter			**68048**
Golf VII Variant (BA5, BV5) 1.6 TDI			**2013-17**
CRKB, CXXB, DBKA	81	110	
PR 7MM, Euro 6, Before soot particulate filter			**68013**
After soot particulate filter, 666 mm.			**68014**
Ch. AU-D-000 001 - Ch. AU-E-000 001, Before soot particulate filter			**68017**
Engine CXXB, Engine DBKA, 11.2014 ->, Before catalytic converter			**68019**
Engine CRKB, Before catalytic converter			**68048**

VOLKSWAGEN Cont.

Golf VII Variant (BA5, BV5) 1.6 TDI **2013-17**
CLHA 77 105
PR 7MM, Euro 6, Before soot particulate filter **68013**
After soot particulate filter, 666 mm. **68014**
Ch. AU-D-000 001 - Ch. AU-E-000 001, Before soot particulate filter **68017**
Golf VII Variant (BA5, BV5) 1.6 TDI 4motion **2013-17**
CRKB, CXXB 81 110
PR 7MM, Euro 6, Before soot particulate filter **68013**
Engine CRKB, After soot particulate filter **68014**
Ch. AU-D-000 001 - Ch. AU-E-000 001, Before soot particulate filter **68017**
Engine CXXB, 11.2014 ->, Before catalytic converter **68019**
Engine CRKB, Before catalytic converter **68048**
Golf VII Variant (BA5, BV5) 1.6 TDI 4motion **2013-17**
CLHA 77 105
PR 7MM, Euro 6, Before soot particulate filter **68013**
After soot particulate filter, 666 mm. **68014**
Ch. AU-D-000 001 - Ch. AU-E-000 001, Before soot particulate filter **68017**
Golf VII Variant (BA5, BV5) 2.0 GTD **2015-17**
CUNA, DGCA, DJGA 135 184
Engine CUNA, In front of exhaust turbocharger **68007**
Golf VII Variant (BA5, BV5) 2.0 TDI **2013 ->**
CRBC, CRLB, CRUA, DCYA, DEJA, DFGA 110 150
Engine CRBC, Engine CRLB, In front of exhaust turbocharger **68007**
Golf VII Variant (BA5, BV5) 2.0 TDI 4motion **2013-18**
CRBC, CRLB, DCYA 110 150
In front of exhaust turbocharger, 566 mm., Black **68007**
Jetta III (1K2) 1.6 TDI **2009-10**
CAYB 66 90
After soot particulate filter; 766 mm. **68003**
Jetta III (1K2) 1.6 TDI **2009-10**
CAYC 77 105
Before soot particulate filter, 646 mm., Brown **68002**
After soot particulate filter; 766 mm. **68003**
Jetta III (1K2) 1.9 TDI **2005-10**
BKC, BLS, BXE 77 105
Engine BLS, Ch. 1K-6-665 391 - Ch. 1K-A-136 358, Before turbocharger **68001**
Engine BLS, Ch. 1K-6-665391-Ch. 1K-A-136358; After soot particulate filter **68005**
Engine BLS, Ch.1K-6-665 391-Ch.1K-A-136 358, Before soot particulate filter **68011**
Jetta III (1K2) 2.0 TDI **2005-10**
AZV, CBDA 100 136
Before soot particulate filter, 646 mm., Brown **68002**
Engine CBDA, After soot particulate filter **68003**
Jetta III (1K2) 2.0 TDI **2005-10**
BMM 103 140
-> 06.2008, Ch. 1K-6-600 001 - Ch. 1K-8-299 000, Before turbocharger **68001**
-> 06.2008, Ch.1K-6-000001-Ch.1K-8-299000; After soot particulate filter **68005**
-> 06.2008, Ch.1K-6-600001-Ch.1K-8-299000, Before soot particulate filter **68011**
Jetta III (1K2) 2.0 TDI **2006-10**
BMN, CEGA 125 170
Ch. 1K-6-855 695 - Ch. 1K-A-136 358, Before turbocharger **68001**
Engine CEGA, Before soot particulate filter **68002**
After soot particulate filter; 766 mm. **68003**
Engine BMN, -> 06.2008, Ch.1K6855695-Ch.1K8299000; After soot particulate filter **68005**
Engine BMN, -> 06.2008, Ch.1K6855695-Ch.1K8299000, Before soot particulate filter **68011**
Jetta III (1K2) 2.0 TDI 16V **2005-10**
BKD, CBDB, CBEA, CJAA 103 140
Engine CBDB, Before soot particulate filter **68002**
Engine CBDB, After soot particulate filter **68003**
Jetta IV (162, 163, AV3, AV2) 1.6 TDI **2010-15**
CAYC 77 105
Before soot particulate filter, 646 mm., Brown **68002**
After soot particulate filter; 766 mm. **68003**
Jetta IV (162, 163, AV3, AV2) 2.0 TDI **2014 ->**
CUUB, CVCA, DELA, DGMA 110 150
Engine DELA, In front of exhaust turbocharger **68007**
Multivan V (7HM, 7HN, 7HF, 7EF, 7EM, 7EN) 2.0 BiTDI **2009-15**
CFCA 132 180
After soot particulate filter, 646 mm. **68076**
Multivan V (7HM, 7HN, 7HF, 7EF, 7EM, 7EN) 2.0 BiTDI 4motion **2009-15**
CFCA 132 180
Engine CFCA **68016**
Before soot particulate filter, 626 mm., Brown **68042**
Multivan V (7HM, 7HN, 7HF, 7EF, 7EM, 7EN) 2.0 TDI **2011-15**
CAAD 84 114
After soot particulate filter, 646 mm. **68076**
Multivan V (7HM, 7HN, 7HF, 7EF, 7EM, 7EN) 2.0 TDI **2009-15**
CAAA 62 84
Before soot particulate filter, PR G0C, PR G1C, PR G0K **68042**
After soot particulate filter, PR 7MG **68076**

VOLKSWAGEN Cont.

Multivan V (7HM, 7HN, 7HF, 7EF, 7EM, 7EN) 2.0 TDI **2009-15**
CAAB 75 102
Before soot particulate filter, 626 mm., Brown **68042**
After soot particulate filter, PR 7MG **68076**
Multivan V (7HM, 7HN, 7HF, 7EF, 7EM, 7EN) 2.0 TDI **2009-15**
CAAC, CCHA 103 140
Before soot particulate filter, 626 mm., Brown **68042**
After soot particulate filter, 646 mm. **68076**
Multivan V (7HM, 7HN, 7HF, 7EF, 7EM, 7EN) 2.0 TDI **2010-15**
CAAE, CCHB 100 136
After soot particulate filter, 646 mm. **68076**
Multivan V (7HM, 7HN, 7HF, 7EF, 7EM, 7EN) 2.0 TDI 4motion **2009-15**
CAAC, CCHA 103 140
Before soot particulate filter, 626 mm., Brown **68042**
Multivan V (7HM, 7HN, 7HF, 7EF, 7EM, 7EN) 2.0 TDI 4motion **2010-15**
CAAE, CCHB 100 136
Engine CAAE **68016**
Engine CCHB, After soot particulate filter **68076**
Multivan VI (SGF, SGM, SGN, SHM, SHN) I Caravelle 2.0 TDI **2015-19**
CAAB, CXGB 75 102
Engine CAAB, Before soot particulate filter **68042**
Multivan VI (SGF, SGM, SGN, SHM, SHN) I Caravelle 2.0 TDI **2015-19**
CAAC 103 140
Before soot particulate filter, 626 mm., Brown **68042**
Multivan VI (SGF, SGM, SGN, SHM, SHN) I Caravelle 2.0 TDI **2015-19**
CFCA 132 180
Before soot particulate filter, 626 mm., Brown **68042**
Multivan VI (SGF, SGM, SGN, SHM, SHN) I Caravelle 2.0 TDI **2015-19**
CAAC 103 140
Engine CAAC **68016**
Before soot particulate filter, 626 mm., Brown **68042**
Multivan VI (SGF, SGM, SGN, SHM, SHN) I Caravelle 2.0 TDI **2015-19**
CFCA 132 180
Engine CFCA **68016**
Passat Alltrack B8 Variant (3G5, CB5) 2.0 TDI 4motion **2015-17**
CRLB, DFEA, DFGA 110 150
In front of exhaust turbocharger, 566 mm., Black **68007**
Passat Alltrack B8 Variant (3G5, CB5) 2.0 TDI 4motion **2015 ->**
CUAA 176 240
After soot particulate filter, Ch. 3C-F-200 001 -> **68030**
Passat Alltrack B8 Variant (3G5, CB5) 2.0 TDI 4motion **2015 ->**
CUPA 135 184
In front of exhaust turbocharger, 566 mm., Black **68007**
Passat B5.5 (3B3) 2.0 TDI **2003-05**
BGW, BHW 100 136
Engine BGW **68062**
Passat B5.5 Variant (3B6) 2.0 TDI **2003-05**
BGW, BHW 100 136
Engine BGW **68062**
Passat B6 (3C2) 1.6 TDI **2009-10**
CAYC 77 105
Before soot particulate filter, 646 mm., Brown **68002**
After soot particulate filter, 506 mm., Brown **68026**
Passat B6 (3C2) 1.9 TDI **2005-10**
BKC, BLS, BXE 77 105
Engine BLS, Ch. 3C-6-021 585 - Ch. 3C-8-088 103, Before turbocharger **68001**
Engine BLS, 06.2005 ->, Ch. 3C-6-021 585 - Ch. 3C-8-088 103 **68016**
Passat B6 (3C2) 2.0 BlueTDI **2009-10**
CBAC 105 143
Before soot particulate filter, 646 mm., Brown **68002**
After soot particulate filter, 506 mm., Brown **68026**
Passat B6 (3C2) 2.0 TDI **2005-10**
BMR, CBBB 125 170
02.2006 ->, Ch. 3C-6-167 558 - Ch. 3C-B-050 000, Before turbocharger **68001**
Engine CBBB, Before soot particulate filter **68002**
Engine BMR, 02.2006 - 05.2009, Ch. 3C-6-167 558 - Ch. 3C-9-200 000 **68016**
After soot particulate filter, 506 mm., Brown **68026**
Passat B6 (3C2) 2.0 TDI **2005-09**
BMP 103 140
Ch. 3C-6-000 001 - Ch. 3C-A-200 000, Before turbocharger **68001**
Engine BMP, Ch. 3C-6-000 001 - Ch. 3C-A-200 000 **68016**
After soot particulate filter, 506 mm., Brown **68026**
Passat B6 (3C2) 2.0 TDI **2005-09**
BUZ 120 163
Ch. 3C-6-085 071 - Ch. 3C-9-200 000, Before turbocharger **68001**
Engine BUZ, 10.2005 ->, Ch. 3C-6-085 071 - Ch. 3C-9-200 000 **68016**
After soot particulate filter, 506 mm., Brown **68026**
Passat B6 (3C2) 2.0 TDI **2005-10**
BMA, CBAA 100 136
Engine CBAA, Before soot particulate filter **68002**
Engine CBAA, After soot particulate filter **68026**

VOLKSWAGEN Cont.

Passat B6 (3C2) 2.0 TDI			**2008-10**
CBDC	81	110	
Before soot particulate filter, 646 mm., Brown			**68002**
After soot particulate filter, 506 mm., Brown			**68026**
Passat B6 (3C2) 2.0 TDI 16V			**2005-10**
BKP, CBAB	103	140	
Engine CBAB, Before soot particulate filter			**68002**
Engine CBAB, After soot particulate filter			**68026**
Passat B6 (3C2) 2.0 TDI 16V 4motion			**2005-10**
BKP, CBAB	103	140	
Engine CBAB, 05.2007 ->, Ch.3C8000001-Ch.3CB050000, Before soot particulate			**68002**
Engine CBAB, After soot particulate filter			**68026**
Passat B6 (3C2) 2.0 TDI 4motion			**2005-09**
BMP	103	140	
Ch. 3C-6-000 001 - Ch. 3C-A-200 000, Before turbocharger			**68001**
Engine BMP, 08.2005 ->, Ch. 3C-6-049 626 - Ch. 3C-A-200 000			**68016**
After soot particulate filter, 506 mm., Brown			**68026**
Passat B6 (3C2) 2.0 TDI 4motion			**2009-10**
CBBB	125	170	
10.2009 ->, Before turbocharger			**68001**
10.2009 ->, Before soot particulate filter			**68002**
After soot particulate filter, 506 mm., Brown			**68026**
Passat B6 Variant (3C5) 1.6 TDI			**2009-10**
CAYC	77	105	
Before soot particulate filter, 646 mm., Brown			**68002**
After soot particulate filter, 506 mm., Brown			**68026**
Passat B6 Variant (3C5) 1.9 TDI			**2005-10**
BKC, BLS, BXE	77	105	
Engine BLS, Ch. 3C-6-021 585 - Ch. 3C-8-088 103, Before turbocharger			**68001**
Engine BLS, Ch. 3C-6-021 585 - Ch. 3C-8-088 103			**68016**
After soot particulate filter, 506 mm., Brown			**68026**
Passat B6 Variant (3C5) 2.0 BlueTDI			**2009-10**
CBAC	105	143	
Before soot particulate filter, 646 mm., Brown			**68002**
After soot particulate filter, 506 mm., Brown			**68026**
Passat B6 Variant (3C5) 2.0 TDI			**2005-10**
BMA, CBAA	100	136	
Engine CBAA, Before soot particulate filter			**68002**
Engine CBAA, After soot particulate filter			**68026**
Passat B6 Variant (3C5) 2.0 TDI			**2005-10**
BMR, CBBB	125	170	
02.2006 ->, Ch. 3C-6-167 558 - Ch. 3C-B-050 000, Before turbocharger			**68001**
Engine CBBB, Before soot particulate filter			**68002**
Engine BMR, 02.2006 - 05.2009, Ch. 3C-6-167 558 - Ch. 3C-9-200 000			**68016**
After soot particulate filter, 506 mm., Brown			**68026**
Passat B6 Variant (3C5) 2.0 TDI			**2005-09**
BMP	103	140	
Ch. 3C-6-049 626 - Ch. 3C-A-200 000, Before turbocharger			**68001**
Engine BMP, Ch. 3C-6-049 626 - Ch. 3C-A-200 000			**68016**
After soot particulate filter, 506 mm., Brown			**68026**
Passat B6 Variant (3C5) 2.0 TDI			**2005-09**
BUZ	120	163	
Ch. 3C-6-085 071 - Ch. 3C-9-200 000, Before turbocharger			**68001**
Engine BUZ, 10.2005 ->, Ch. 3C-6-085 071 - Ch. 3C-9-200 000			**68016**
After soot particulate filter, 506 mm., Brown			**68026**
Passat B6 Variant (3C5) 2.0 TDI			**2008-10**
CBDC	81	110	
Before soot particulate filter, 646 mm., Brown			**68002**
After soot particulate filter, 506 mm., Brown			**68026**
Passat B6 Variant (3C5) 2.0 TDI 16V			**2005-10**
BKP, CBAB	103	140	
Engine CBAB, Before soot particulate filter			**68002**
Engine CBAB, After soot particulate filter			**68026**
Passat B6 Variant (3C5) 2.0 TDI 16V 4motion			**2005-10**
BKP, CBAB	103	140	
Engine CBAB, 05.2007 ->, Before soot particulate filter			**68002**
Engine CBAB, After soot particulate filter			**68026**
Passat B6 Variant (3C5) 2.0 TDI 4motion			**2005-09**
BMP	103	140	
Ch. 3C-6-049 626 - Ch. 3C-A-200 000, Before turbocharger			**68001**
Engine BMP, Ch. 3C-6-049 626 - Ch. 3C-A-200 000			**68016**
After soot particulate filter, 506 mm., Brown			**68026**
Passat B6 Variant (3C5) 2.0 TDI 4motion			**2009-10**
CBBB	125	170	
10.2009 ->, Before turbocharger			**68001**
Engine CBBB, 10.2009 ->, Before soot particulate filter			**68002**
After soot particulate filter, 506 mm., Brown			**68026**
Passat B7 (362) 1.6 TDI			**2010-14**
CAYC	77	105	
Before soot particulate filter, 646 mm., Brown			**68002**
Passat B7 (A32, A33) 2.0 TDI			**2011-15**
CFFB, CKRA	103	140	
Before soot particulate filter, 706 mm., Brown			**68045**

FAE

VOLKSWAGEN Cont.

Passat B7 Variant (365) 1.6 TDI			**2010-14**
CAYC	77	105	
Before soot particulate filter, 646 mm., Brown			**68002**
After soot particulate filter, 506 mm., Brown			**68026**
Passat B8 (3G2, CB2) 1.6 TDI			**2014 ->**
DCXA, DCZA	88	120	
Before soot particulate filter, 896 mm., Brown			**68013**
Before catalytic converter			**68019**
With urea injection, With factory fitted soot -/particulate filter, 696 mm.			**68059**
Engine DCZA, Engine DCXA, Ch.3C-F-200 001 ->, Before soot particulate filter			**68078**
Passat B8 (3G2, CB2) 2.0 TDI			**2014 ->**
CRLB, DBGA, DFGA, DSRA, DSRB, DTSA, DTSB	110	150	
Engine DBGA, Engine CRLB, In front of exhaust turbocharger			**68007**
Passat B8 (3G2, CB2) 2.0 TDI			**2015 ->**
CUPA	135	184	
In front of exhaust turbocharger, 566 mm., Black			**68007**
Passat B8 (3G2, CB2) 2.0 TDI 4motion			**2014 ->**
CUAA	176	240	
After soot particulate filter, Ch. 3C-F-200 001 ->			**68030**
Passat B8 (3G2, CB2) 2.0 TDI 4motion			**2014 ->**
CRLB, DFEA, DFGA, DTSA	110	150	
In front of exhaust turbocharger, 566 mm., Black			**68007**
Passat B8 Variant (3G5, CB5) 1.6 TDI			**2014 ->**
DCXA, DCZA	88	120	
Before soot particulate filter, 896 mm., Brown			**68013**
11.2014 ->, Before catalytic converter			**68019**
With urea injection, With factory fitted soot -/particulate filter, 696 mm.			**68059**
Engine DCXA, Engine DCZA, Ch.3C-F-200 001 ->, Before soot particulate filter			**68078**
Passat B8 Variant (3G5, CB5) 2.0 TDI			**2014 ->**
CRLB, DBGA, DFGA, DSRA, DSRB, DTSA, DTSB	110	150	
Engine DBGA, Engine CRLB, In front of exhaust turbocharger			**68007**
Passat B8 Variant (3G5, CB5) 2.0 TDI			**2015 ->**
CUPA	135	184	
In front of exhaust turbocharger, 566 mm., Black			**68007**
Passat B8 Variant (3G5, CB5) 2.0 TDI 4motion			**2014 ->**
CUAA	176	240	
After soot particulate filter, Ch. 3C-F-200 001 ->			**68030**
Passat B8 Variant (3G5, CB5) 2.0 TDI 4motion			**2014 ->**
CRLB, DFEA, DFGA, DTSA	110	150	
In front of exhaust turbocharger, 566 mm., Black			**68007**
Passat CC B6 (357) 2.0 BlueTDI			**2009-10**
CBAC	105	143	
Before soot particulate filter, 646 mm., Brown			**68002**
After soot particulate filter, 506 mm., Brown			**68026**
Passat CC B6 (357) 2.0 TDI			**2008-12**
CBAB, CFFB	103	140	
Engine CBAB, Before soot particulate filter			**68002**
Engine CBAB, After soot particulate filter			**68026**
Passat CC B6 (357) 2.0 TDI			**2008-12**
CBBB, CFGB, CLLA	125	170	
Engine CBBB, -> 11.2010, Before turbocharger			**68001**
Engine CBBB, Before soot particulate filter			**68002**
Engine CBBB, After soot particulate filter			**68026**
Passat CC B6 (357) 2.0 TDI			**2008-11**
CBAA, CFFA	100	136	
Engine CBAA, Before soot particulate filter			**68002**
Engine CBAA, After soot particulate filter			**68026**
Passat CC B6 (357) 2.0 TDI 4motion			**2009-12**
CBAB, CFFB	103	140	
Engine CBAB, -> 11.2010, Before soot particulate filter			**68002**
Engine CBAB, After soot particulate filter			**68026**
Passat CC B6 (357) 2.0 TDI 4motion			**2009-12**
CBBB, CFGB	125	170	
Engine CBBB, Ch. 3C-A-500 000 ->, Before turbocharger			**68001**
Engine CBBB, Ch. 3C-A-500091 ->, Before soot particulate filter			**68002**
Engine CBBB, After soot particulate filter			**68026**
Phaeton (3D1, 3D2, 3D3, 3D4, 3D6, 3D7, 3D8, 3D9) 3.0 V6 TDI			**2004-07**
BMK	165	224	
Before catalytic converter, Before turbocharger 336 mm., Black			**68097**
Phaeton (3D1, 3D2, 3D3, 3D4, 3D6, 3D7, 3D8, 3D9) 3.0 V6 TDI			**2008-16**
CARB, CEXA	176	240	
Engine CEXA, Before catalytic converter, Before turbocharger			**68097**
Phaeton (3D1, 3D2, 3D3, 3D4, 3D6, 3D7, 3D8, 3D9) 3.0 V6 TDI			**2007-08**
CARA	171	233	
Before catalytic converter, Before turbocharger 336 mm., Black			**68097**
Polo (9N, 9A) 1.4 TDI			**2005-09**
BMS, BNV	59	80	
Engine BMS, Ch. 9N-5-500 001 ->, Before soot particulate filter			**68049**
Engine BMS, Exhaust turbocharger			**68056**
Engine BMS			**68058**
Engine BMS, Ch. 9N-5-500 001 ->, Exhaust turbocharger			**68063**
R.H.D.			**68064**

VOLKSWAGEN Cont.

Polo (9N, 9A) 1.4 TDI		**2005-09**
BNM, BWB	51	70
Engine BMS, Ch. 9N-5-500 001 ->, Before soot particulate filter		**68049**
Exhaust turbocharger, 731 mm., Black		**68056**
Engine BWB		**68058**
Engine BWB, Ch. 9N-5-500 001 ->, Exhaust turbocharger		**68063**
R.H.D.		**68064**
Polo (9N, 9A) 1.9 TDI		**2001-09**
ATD, AXR, BMT	74	101
Engine BMS, Ch. 9N-5-500 001 ->, Before soot particulate filter		**68049**
Exhaust turbocharger, 731 mm., Black		**68056**
Engine BMT, Before turbocharger		**68058**
Engine BMT, Ch. 9N-5-500 001 ->, Exhaust turbocharger		**68063**
Engine BMT, R.H.D.		**68064**
Polo V (6R1, 6C1) 1.2 TDI		**2009 ->**
CFWA	55	75
Ch. 6R-D-000 001 ->; Before soot particulate filter		**68021**
After soot particulate filter; 501 mm.; R.H.D.		**68024**
Before soot particulate filter; 426 mm., Brown		**68036**
Polo V (6R1, 6C1) 1.6 TDI		**2009 ->**
CAYA	55	75
Ch. 6R-A-000 001 ->; Before soot particulate filter		**68021**
After soot particulate filter; 501 mm.; R.H.D.		**68024**
After soot particulate filter; 746 mm.		**68035**
Before soot particulate filter; 426 mm., Brown		**68036**
Polo V (6R1, 6C1) 1.6 TDI		**2009 ->**
CAYB	66	90
Ch. 6R-D-000 001 ->; Before soot particulate filter		**68021**
Ch. 6R-A-000 001 ->; Before soot particulate filter		**68021**
After soot particulate filter; 501 mm.; R.H.D.		**68024**
After soot particulate filter; 746 mm.		**68035**
Before soot particulate filter; 426 mm., Brown		**68036**
Polo V (6R1, 6C1) 1.6 TDI		**2009 ->**
CAYC, CLNA	77	105
Engine CAYC, Ch. 6R-A-000 001 ->		**68021**
Engine CAYC, Ch. 6R-D-000 001 ->		**68021**
After soot particulate filter; 501 mm.; R.H.D.		**68024**
Engine CAYC; After soot particulate filter		**68035**
Engine CAYC; Before soot particulate filter		**68036**
Polo VI (AW1, BZ1, AE1) 1.6 TDI		**2017-19**
DGTC	59	80
Before catalytic converter		**68019**
Engine DGTC, With factory fitted soot -/particulate filter, 696 mm.		**68059**
Engine DGTC, Ch. AW-J-000 001 ->, Before soot particulate filter		**68078**
Polo VI (AW1, BZ1, AE1) 1.6 TDI		**2017-21**
DGTD	70	95
Before catalytic converter		**68019**
Engine DGTD, With factory fitted soot -/particulate filter, 696 mm.		**68059**
Engine DGTD, Ch. AW-J-000 001 ->, Before soot particulate filter		**68078**
Scirocco III (137, 138) 2.0 TDI		**2008-17**
CBDB, CFHC	103	140
Engine CBDB, Before soot particulate filter		**68002**
Engine CBDB, After soot particulate filter		**68003**
Scirocco III (137, 138) 2.0 TDI		**2009-17**
CBBB, CFGB	125	170
Engine CBBB, -> 11.2010, Before turbocharger		**68001**
Engine CBBB, Before soot particulate filter		**68002**
After soot particulate filter; 766 mm.		**68003**
T-Cross (C11) 1.6 TDi		**2018 ->**
DGTD	70	95
-> 11.2020, Before catalytic converter		**68019**
Engine DGTD, Before soot particulate filter		**68078**
Tiguan (5N) 2.0 TDI		**2008-18**
CBAB, CFFB	103	140
Before soot particulate filter, 646 mm., Brown		**68002**
Engine CBAB, 11.2008 - 05.2011, After soot particulate filter		**68003**
Tiguan (5N) 2.0 TDI 4motion		**2007-18**
CBAB, CFFB, CLJA	103	140
Before soot particulate filter, 646 mm., Brown		**68002**
After soot particulate filter; 766 mm.		**68003**
Engine CBAB, -> 11.2008; After soot particulate filter		**68005**
Tiguan (5N) 2.0 TDI 4motion		**2007-18**
CBBB, CFGB	125	170
Engine CBBB, 02.2008 - 05.2011, Ch.5N8025403-Ch.5NB600000, Before		**68001**
Before soot particulate filter, 646 mm., Brown		**68002**
Engine CBBB, -> 05.2010, After soot particulate filter		**68003**
Tiguan (5N) 2.0 TDI 4motion		**2007-18**
CBAA, CFFA	100	136
Before soot particulate filter, 646 mm., Brown		**68002**

FAE

VOLKSWAGEN Cont.

Tiguan (5N) 2.0 TDI 4motion		**2008-09**
CBBA	120	163
Ch. 5N-8-034 210 - Ch. 5N-A-600 000, Before turbocharger		**68001**
Before soot particulate filter, 646 mm., Brown		**68002**
11.2008 ->, After soot particulate filter		**68003**
03.2008 ->, Ch.5N-8-034210 - Ch.5N-9-060000; After soot particulate filter		**68005**
Tiguan (AD1, AX1) 1.6 TDI		**2016-20**
DGDB	85	115
With factory fitted soot -/particulate filter, 696 mm.		**68059**
Tiguan (AD1, AX1) 2.0 TDI		**2016 ->**
DFGA, DTSA, DTSB	110	150
In front of exhaust turbocharger, 566 mm., Black		**68007**
Tiguan (AD1, AX1) 2.0 TDI		**2016-19**
DFGC	85	115
In front of exhaust turbocharger, 566 mm., Black		**68007**
Tiguan (AD1, AX1) 2.0 TDI		**2016-20**
CYKC	81	110
In front of exhaust turbocharger, 566 mm., Black		**68007**
Tiguan (AD1, AX1) 2.0 TDI 4motion		**2016-20**
DBGC, DFGA, DTSA, DTSB	110	150
In front of exhaust turbocharger, 566 mm., Black		**68007**
Touareg (7LA, 7L6, 7L7) 3.0 TDI		**2006-10**
BUN, CASB	155	211
Engine BUN, -> Ch.7L-8-080 000, Before catalytic converter, Before turbocharger		**68097**
Touareg (7LA, 7L6, 7L7) 3.0 V6 TDI		**2004-10**
BKS, CATA	165	225
Engine BKS, Before catalytic converter, Before turbocharger		**68097**
Touareg (7LA, 7L6, 7L7) 3.0 V6 TDI		**2007-10**
CASA, CASC	176	240
Engine CASA, Before catalytic converter, Before turbocharger		**68097**
Touareg (7LA, 7L6, 7L7) 5.0 R50 TDI		**2007-10**
CBWA	257	350
Engine CBWA, Before soot particulate filter, Left		**68068**
Touareg (7LA, 7L6, 7L7) 5.0 V10 TDI		**2002-10**
AYH, BKW, BLE, BWF	230	313
Engine BLE, Before soot particulate filter, 11.2004 ->, Left		**68068**
Touareg (7P5, 7P6) 3.0 V6 TDI		**2014-18**
CVVA	193	262
Before soot particulate filter, 371 mm., Black		**68092**
Touareg (7P5, 7P6) 3.0 V6 TDI		**2010-18**
CASA, CNRB	176	240
Before soot particulate filter, 371 mm., Black		**68092**
Engine CASA, Before catalytic converter, Before turbocharger		**68097**
Touareg (7P5, 7P6) 3.0 V6 TDI		**2010-18**
CATA	165	225
Before catalytic converter, Before turbocharger 336 mm., Black		**68097**
Touareg (7P5, 7P6) 3.0 V6 TDI		**2010-18**
CASD, CJMA, CRCD, CVWA	150	204
Engine CJMA, Before turbocharger		**68084**
Engine CASD, Before catalytic converter, Before turbocharger		**68097**
Touareg (7P5, 7P6) 3.0 V6 TDI		**2011-18**
CJGD, CRCA	180	245
Engine CRCA, Before turbocharger		**68084**
Touareg (7P5, 7P6) 4.2 V8 TDI		**2010-18**
CKDA	250	340
Engine CKDA, Before soot particulate filter, Left		**68068**
Touran (1T1, 1T2) 1.9 TDI		**2003-10**
BKC, BLS, BXE	77	105
Engine BLS, 06.2005 ->, Ch.1T6000001-Ch.1TA150000, Before turbocharger		**68001**
Engine BLS, 06.2005 ->, Ch. 1T-6-000 001 - Ch. 1T-A-150 000		**68016**
Engine BLS, After soot particulate filter		**68028**
Touran (1T1, 1T2) 1.9 TDI		**2004-10**
BRU, BXF, BXJ	66	90
Engine BXJ, 06.2006 ->, Ch.1T-6-185 467-Ch.1T-A-150 000, Before turbocharger		**68001**
Engine BXJ, 06.2006 ->, Ch. 1T-6-185 467 - Ch. 1T-A-150 000		**68016**
Engine BXJ, After soot particulate filter		**68028**
Touran (1T1, 1T2) 2.0 TDI		**2005-10**
BMN, CFJA	125	170
Ch. 1T-6-095 583 - Ch. 1T-A-150 000, Before turbocharger		**68001**
Engine BMN, Ch. 1T-6-095 583 - Ch. 1T-A-150 000		**68016**
Engine BMN, After soot particulate filter		**68028**
Touran (1T1, 1T2) 2.0 TDI		**2005-10**
BMM	103	140
Before turbocharger, 656 mm., Black		**68001**
Engine BMM, Ch. 1T-6-095 583 - Ch. 1T-A-150 000		**68016**
After soot particulate filter, 876 mm.		**68028**
Touran (1T3) 1.6 TDI		**2010-15**
CAYB	66	90
Before soot particulate filter, 706 mm., Brown		**68045**
After soot particulate filter, 876 mm.		**68057**
Touran (1T3) 1.6 TDI		**2010-15**
CAYC	77	105
Before soot particulate filter, 706 mm., Brown		**68045**
After soot particulate filter, 876 mm.		**68057**

VOLKSWAGEN Cont.

Touran (5T1) 1.6 TDI			**2015-16**
CRKB	81	110	
With factory fitted soot -/particulate filter, 696 mm.			**68059**
Touran (5T1) 1.6 TDI			**2016 ->**
DGDA	85	115	
With factory fitted soot -/particulate filter, 696 mm.			**68059**
Touran (5T1) 2.0 TDI			**2015 ->**
DFEA, DFGA, DTSB	110	150	
In front of exhaust turbocharger, 566 mm., Black			**68007**
Touran (5T1) 2.0 TDI			**2015-19**
CRVA, CYKB, DFEB, DFGB	81	110	
Engine CYKB, In front of exhaust turbocharger			**68007**
Touran Van (1T3) 1.6 TDI			**2010-15**
CAYB	66	90	
Before soot particulate filter, 706 mm., Brown			**68045**
Touran Van (1T3) 1.6 TDI			**2010-15**
CAYC	77	105	
Before soot particulate filter, 706 mm., Brown			**68045**
Transporter / Caravelle VI Bus (SGB, SGJ, SHB, SHJ) 2.0 TDI			**2015-19**
CAAA, CXGA	62	84	
Engine CAAA, Before soot particulate filter			**68042**
Transporter / Caravelle VI Bus (SGB, SGJ, SHB, SHJ) 2.0 TDI			**2015-19**
CAAB, CXGB	75	102	
Engine CAAB, Before soot particulate filter			**68042**
Transporter / Caravelle VI Bus (SGB, SGJ, SHB, SHJ) 2.0 TDI			**2015-19**
CAAC	103	140	
Before soot particulate filter, 626 mm., Brown			**68042**
Transporter / Caravelle VI Bus (SGB, SGJ, SHB, SHJ) 2.0 TDI			**2015-19**
CFCA	132	180	
Before soot particulate filter, 626 mm., Brown			**68042**
Transporter / Caravelle VI Bus (SGB, SGJ, SHB, SHJ) 2.0 TDI			**2015-19**
CAAC	103	140	
Engine CAAC			**68016**
Before soot particulate filter, 626 mm., Brown			**68042**
Transporter / Caravelle VI Bus (SGB, SGJ, SHB, SHJ) 2.0 TDI			**2015-19**
CFCA	132	180	
Engine CFCA			**68016**
Before soot particulate filter, 626 mm., Brown			**68042**
Transporter V Bus (7HB, 7HJ, 7EB, 7EJ) I Transporter / Caravelle			**2009-15**
CFCA	132	180	
Before soot particulate filter, 626 mm., Brown			**68042**
After soot particulate filter, 646 mm.			**68076**
Transporter V Bus (7HB, 7HJ, 7EB, 7EJ) I Transporter / Caravelle			**2009-15**
CFCA	132	180	
Engine CFCA			**68016**
Before soot particulate filter, 626 mm., Brown			**68042**
Transporter V Bus (7HB, 7HJ, 7EB, 7EJ) I Transporter / Caravelle			**2011-15**
CAAD	84	114	
Before soot particulate filter, 626 mm., Brown			**68042**
After soot particulate filter, Ch. 7J-G 000 001 ->			**68076**
Transporter V Bus (7HB, 7HJ, 7EB, 7EJ) I Transporter / Caravelle			**2010-15**
CAAE, CCHB	100	136	
Before soot particulate filter, 626 mm., Brown			**68042**
After soot particulate filter, 646 mm.			**68076**
Transporter V Bus (7HB, 7HJ, 7EB, 7EJ) I Transporter / Caravelle			**2009-15**
CAAA	62	84	
Before soot particulate filter, 626 mm., Brown			**68042**
After soot particulate filter, PR 7MG			**68076**
Transporter V Bus (7HB, 7HJ, 7EB, 7EJ) I Transporter / Caravelle			**2009-15**
CAAB	75	102	
Before soot particulate filter, 626 mm., Brown			**68042**
After soot particulate filter, PR 7MG			**68076**
Transporter V Bus (7HB, 7HJ, 7EB, 7EJ) I Transporter / Caravelle			**2009-15**
CAAC, CCHA	103	140	
Before soot particulate filter, 626 mm., Brown			**68042**
After soot particulate filter, 646 mm.			**68076**
Transporter V Bus (7HB, 7HJ, 7EB, 7EJ) I Transporter / Caravelle			**2010-15**
CAAE, CCHB	100	136	
Engine CCHB, Engine CAAE			**68016**
Engine CCHB, After soot particulate filter			**68076**
Transporter V Bus (7HB, 7HJ, 7EB, 7EJ) I Transporter / Caravelle			**2009-15**
CAAC, CCHA	103	140	
Engine CCHA, Engine CAAC			**68016**
Before soot particulate filter, 626 mm., Brown			**68042**
Transporter V Platform/Chassis (7JD, 7JE, 7JL, 7JY, 7JZ, 7FD, 7FE			**2009-15**
CFCA	132	180	
After soot particulate filter, 646 mm.			**68076**
Transporter V Platform/Chassis (7JD, 7JE, 7JL, 7JY, 7JZ, 7FD, 7FE			**2009-15**
CFCA	132	180	
Engine CFCA			**68016**
Before soot particulate filter, 626 mm., Brown			**68042**

FAE

VOLKSWAGEN Cont.

Transporter V Platform/Chassis (7JD, 7JE, 7JL, 7JY, 7JZ, 7FD, 7FE			**2011-15**
CAAD	84	114	
Before soot particulate filter, 626 mm., Brown			**68042**
After soot particulate filter, 646 mm.			**68076**
Transporter V Platform/Chassis (7JD, 7JE, 7JL, 7JY, 7JZ, 7FD, 7FE			**2010-15**
CAAE	100	136	
After soot particulate filter, 646 mm.			**68076**
Transporter V Platform/Chassis (7JD, 7JE, 7JL, 7JY, 7JZ, 7FD, 7FE			**2009-15**
CAAA	62	84	
Before soot particulate filter, 626 mm., Brown			**68042**
After soot particulate filter, PR 7MG			**68076**
Transporter V Platform/Chassis (7JD, 7JE, 7JL, 7JY, 7JZ, 7FD, 7FE			**2009-15**
CAAB	75	102	
Before soot particulate filter, 626 mm., Brown			**68042**
After soot particulate filter, PR 7MG			**68076**
Transporter V Platform/Chassis (7JD, 7JE, 7JL, 7JY, 7JZ, 7FD, 7FE			**2009-15**
CAAC, CCHA	103	140	
Before soot particulate filter, 626 mm., Brown			**68042**
After soot particulate filter, 646 mm.			**68076**
Transporter V Platform/Chassis (7JD, 7JE, 7JL, 7JY, 7JZ, 7FD, 7FE			**2010-15**
CAAE, CCHB	100	136	
Before soot particulate filter, 546 mm., Brown			**68016**
After soot particulate filter, 646 mm.			**68076**
Transporter V Platform/Chassis (7JD, 7JE, 7JL, 7JY, 7JZ, 7FD, 7FE			**2009-15**
CAAC, CCHA	103	140	
Engine CAAC			**68016**
Before soot particulate filter, 626 mm., Brown			**68042**
Transporter V Van (7HA, 7HH, 7EA, 7EH) 2.0 BiTDI			**2009-15**
CFCA	132	180	
Before soot particulate filter, 626 mm., Brown			**68042**
After soot particulate filter, 646 mm.			**68076**
Transporter V Van (7HA, 7HH, 7EA, 7EH) 2.0 BiTDI 4motion			**2009-15**
CFCA	132	180	
Engine CFCA			**68016**
Transporter V Van (7HA, 7HH, 7EA, 7EH) 2.0 TDI			**2011-15**
CAAD	84	114	
Before soot particulate filter, 626 mm., Brown			**68042**
After soot particulate filter, 646 mm.			**68076**
Transporter V Van (7HA, 7HH, 7EA, 7EH) 2.0 TDI			**2010-15**
CAAE, CCHB	100	136	
After soot particulate filter, 646 mm.			**68076**
Transporter V Van (7HA, 7HH, 7EA, 7EH) 2.0 TDI			**2009-15**
CAAA	62	84	
Before soot particulate filter, 626 mm., Brown			**68042**
After soot particulate filter, PR 7MG			**68076**
Transporter V Van (7HA, 7HH, 7EA, 7EH) 2.0 TDI			**2009-15**
CAAB	75	102	
Before soot particulate filter, 626 mm., Brown			**68042**
After soot particulate filter, PR 7MG			**68076**
Transporter V Van (7HA, 7HH, 7EA, 7EH) 2.0 TDI			**2009-15**
CAAC, CCHA	103	140	
Before soot particulate filter, 626 mm., Brown			**68042**
After soot particulate filter, 646 mm.			**68076**
Transporter V Van (7HA, 7HH, 7EA, 7EH) 2.0 TDI 4motion			**2010-15**
CAAE, CCHB	100	136	
Before soot particulate filter, 546 mm., Brown			**68016**
Engine CCHB, After soot particulate filter			**68076**
Transporter V Van (7HA, 7HH, 7EA, 7EH) 2.0 TDI 4motion			**2009-15**
CAAC, CCHA	103	140	
Engine CAAC			**68016**
Before soot particulate filter, 626 mm., Brown			**68042**
Transporter VI Platform/Chassis (SFD, SFE, SFL, SFZ, SJD, SJE,			**2015-19**
CAAA, CXGA	62	84	
Before soot particulate filter, PR G0C, PR G1C, PR G0K			**68042**
Transporter VI Platform/Chassis (SFD, SFE, SFL, SFZ, SJD, SJE,			**2015-19**
CAAC	103	140	
Before soot particulate filter, PR G0C, PR G1C, PR G0K			**68042**
Transporter VI Platform/Chassis (SFD, SFE, SFL, SFZ, SJD, SJE,			**2015-19**
CFCA	132	180	
Before soot particulate filter, 626 mm., Brown			**68042**
Transporter VI Platform/Chassis (SFD, SFE, SFL, SFZ, SJD, SJE,			**2015-19**
CAAC	103	140	
Engine CAAC			**68016**
Before soot particulate filter, PR G0C, PR G1C, PR G0K			**68042**
Transporter VI Platform/Chassis (SFD, SFE, SFL, SFZ, SJD, SJE,			**2015-19**
CFCA	132	180	
Engine CFCA			**68016**
Transporter VI Van (SGA, SGH, SHA, SHH) 2.0 TDI			**2015-19**
CAAA, CXGA	62	84	
Engine CAAA, Before soot particulate filter			**68042**
Transporter VI Van (SGA, SGH, SHA, SHH) 2.0 TDI			**2015-19**
CAAB, CXGB	75	102	
Engine CAAB, PR G0K, PR G0C, PR G1C, Before soot particulate filter			**68042**

VOLKSWAGEN Cont.			
Transporter VI Van (SGA, SGH, SHA, SHH) 2.0 TDI			**2015-19**
CAAC	103	140	
Before soot particulate filter, PR G0C, PR G0K, PR G1C			**68042**
Transporter VI Van (SGA, SGH, SHA, SHH) 2.0 TDI 4motion			**2015-19**
CAAC	103	140	
Engine CAAC			**68016**
Before soot particulate filter, PR G0C, PR G1C, PR G0K			**68042**
Transporter VI Van (SGA, SGH, SHA, SHH) 2.0 TDI 4motion			**2015-19**
CFCA	132	180	
Engine CFCA			**68016**
T-Roc (A11, D11) 1.6 TDI			**2018-21**
DGTE	85	115	
Before catalytic converter			**68019**
With factory fitted soot -/particulate filter, 696 mm.			**68059**
Engine DGTE, Before soot particulate filter			**68078**
T-Roc (A11, D11) 2.0 TDI			**2018 ->**
DFFA, DTTA, DTTC	110	150	
In front of exhaust turbocharger, 566 mm., Black			**68007**
T-Roc (A11, D11) 2.0 TDI 4motion			**2017 ->**
DFFA, DTTA, DTTC	110	150	
In front of exhaust turbocharger, 566 mm., Black			**68007**

FAE

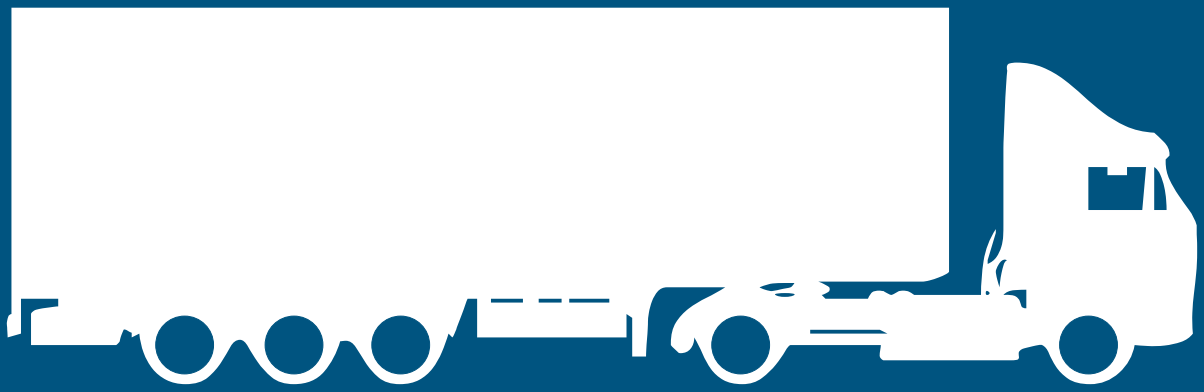

INDUSTRIAL VEHICLE APPLICATIONS
APLICACIONES POR VEHÍCULO INDUSTRIAL
APPLICATIONS POUR VÉHICULE INDUSTRIEL

ASTRA

HD 9 64,5			**2014 ->**
F3HFE611B	368	500	
After / Before SCR catalytic converter, 667 mm., Black			**68006**
HD 9 64,56			**2011 ->**
F3BE0681A, F3HFE611A	412	560	
After / Before SCR catalytic converter, 667 mm., Black			**68006**
HD 9 64.56 T			**2011 ->**
------	412	560	
After / Before SCR catalytic converter, 667 mm., Black			**68006**
HD 9 66.56 T			**2011 ->**
F3BE0681A	412	560	
After / Before SCR catalytic converter, 667 mm., Black			**68006**
HD 9 86,56			**2011 ->**
F3BE0681A	412	560	
After / Before SCR catalytic converter, 667 mm., Black			**68006**

DAF

CF FA 220			**2014 ->**
PX-7 164	164	223	
After catalytic converter, 1028 mm., Black			**68009**
CF FA 250			**2014 ->**
PX-7 186	186	253	
After catalytic converter, 1028 mm., Black			**68009**
CF FA 280			**2014 ->**
PX-7 208	208	283	
After catalytic converter, 1028 mm., Black			**68009**
CF FA 290			**2013 ->**
MX-11 210	210	286	
After catalytic converter, 1028 mm., Black			**68009**
CF FA 300			**2017 ->**
MX-11 220	220	299	
After catalytic converter, 1028 mm., Black			**68009**
CF FA 310			**2014 ->**
PX-7 231	231	314	
After catalytic converter, 1028 mm., Black			**68009**
CF FA 330			**2013 ->**
MX-11 240	240	326	
After catalytic converter, 1028 mm., Black			**68009**
CF FA 340			**2017 ->**
MX-11 251	251	341	
After catalytic converter, 1028 mm., Black			**68009**
CF FA 370			**2013 ->**
MX-11 271	271	370	
After catalytic converter, 1028 mm., Black			**68009**
CF FA 370			**2017 ->**
MX-11 270	270	367	
After catalytic converter, 1028 mm., Black			**68009**
CF FA 400			**2013 ->**
MX-11 291	291	396	
After catalytic converter, 1028 mm., Black			**68009**
CF FA 400			**2013 ->**
MX-11 291	291	396	
After catalytic converter, 1028 mm., Black			**68009**
CF FA 410			**2013 ->**
MX-13 303	303	412	
After catalytic converter, 1028 mm., Black			**68009**
CF FA 410			**2013 ->**
MX-13 303	303	412	
After catalytic converter, 1028 mm., Black			**68009**
CF FA 440			**2013 ->**
MX-11 320	320	435	
After catalytic converter, 1028 mm., Black			**68009**
CF FA 440			**2013 ->**
MX-11 320	320	435	
After catalytic converter, 1028 mm., Black			**68009**
CF FA 450			**2017 ->**
MX-11 330	330	449	
After catalytic converter, 1028 mm., Black			**68009**
CF FA 460			**2013 ->**
MX-13 340	340	462	
After catalytic converter, 1028 mm., Black			**68009**
CF FA 460			**2013 ->**
MX-13 340	340	462	
After catalytic converter, 1028 mm., Black			**68009**
CF FA 480			**2017 ->**
MX-13 355	355	483	
After catalytic converter, 1028 mm., Black			**68009**
CF FA 510			**2013 ->**
MX-13 375	375	510	
After catalytic converter, 1028 mm., Black			**68009**
CF FA 510			**2013 ->**
MX-13 375	375	510	
After catalytic converter, 1028 mm., Black			**68009**

DAF Cont.

CF FA 530			**2017 ->**
MX-13 390	390	530	
After catalytic converter, 1028 mm., Black			**68009**
CF FAC 400			**2015 ->**
MX-11 291	291	396	
After catalytic converter, 1028 mm., Black			**68009**
CF FAC 410			**2015 ->**
MX-13 303	303	412	
After catalytic converter, 1028 mm., Black			**68009**
CF FAC 440			**2015 ->**
MX-11 320	320	435	
After catalytic converter, 1028 mm., Black			**68009**
CF FAC 460			**2015 ->**
MX-13 340	340	462	
After catalytic converter, 1028 mm., Black			**68009**
CF FAC 510			**2015 ->**
MX-13 375	375	510	
After catalytic converter, 1028 mm., Black			**68009**
CF FAD 290			**2013 ->**
MX-11 210	210	286	
After catalytic converter, 1028 mm., Black			**68009**
CF FAD 290			**2013 ->**
MX-11 210	210	286	
After catalytic converter, 1028 mm., Black			**68009**
CF FAD 330			**2013 ->**
MX-11 240	240	326	
After catalytic converter, 1028 mm., Black			**68009**
CF FAD 330			**2013 ->**
MX-11 240	240	326	
After catalytic converter, 1028 mm., Black			**68009**
CF FAD 370			**2013 ->**
MX-11 271	271	370	
After catalytic converter, 1028 mm., Black			**68009**
CF FAD 370			**2013 ->**
MX-11 271	271	370	
After catalytic converter, 1028 mm., Black			**68009**
CF FAD 400			**2013 ->**
MX-11 291	291	396	
After catalytic converter, 1028 mm., Black			**68009**
CF FAD 400			**2013 ->**
MX-11 291	291	396	
After catalytic converter, 1028 mm., Black			**68009**
CF FAD 410			**2013 ->**
MX-13 303	303	412	
After catalytic converter, 1028 mm., Black			**68009**
CF FAD 410			**2013 ->**
MX-13 303	303	412	
After catalytic converter, 1028 mm., Black			**68009**
CF FAD 440			**2013 ->**
MX-11 320	320	435	
After catalytic converter, 1028 mm., Black			**68009**
CF FAD 440			**2013 ->**
MX-11 320	320	435	
After catalytic converter, 1028 mm., Black			**68009**
CF FAD 460			**2013 ->**
MX-13 340	340	462	
After catalytic converter, 1028 mm., Black			**68009**
CF FAD 460			**2013 ->**
MX-13 340	340	462	
After catalytic converter, 1028 mm., Black			**68009**
CF FAD 510			**2013 ->**
MX-13 375	375	510	
After catalytic converter, 1028 mm., Black			**68009**
CF FAD 510			**2013 ->**
MX-13 375	375	510	
After catalytic converter, 1028 mm., Black			**68009**
CF FAG 300			**2017 ->**
MX-11 220	220	299	
After catalytic converter, 1028 mm., Black			**68009**
CF FAG 340			**2017 ->**
MX-11 251	251	341	
After catalytic converter, 1028 mm., Black			**68009**
CF FAG 370			**2017 ->**
MX-11 270	270	367	
After catalytic converter, 1028 mm., Black			**68009**
CF FAG 410			**2017 ->**
MX-11 300	300	408	
After catalytic converter, 1028 mm., Black			**68009**
CF FAG 450			**2017 ->**
MX-11 330	330	449	
After catalytic converter, 1028 mm., Black			**68009**
CF FAN 280			**2015 ->**
PX-7 208	208	283	
After catalytic converter, 1028 mm., Black			**68009**

DAF Cont.		
CF FAN 290, FAG 290		**2013 ->**
MX-11 210	210	286
After catalytic converter, 1028 mm., Black		**68009**
CF FAN 300		**2017 ->**
MX-11 220	220	299
After catalytic converter, 1028 mm., Black		**68009**
CF FAN 310		**2015 ->**
PX-7 231	231	314
After catalytic converter, 1028 mm., Black		**68009**
CF FAN 330, FAG 330		**2013 ->**
MX-11 240	240	326
After catalytic converter, 1028 mm., Black		**68009**
CF FAN 340		**2017 ->**
MX-11 251	251	341
After catalytic converter, 1028 mm., Black		**68009**
CF FAN 370		**2017 ->**
MX-11 270	270	367
After catalytic converter, 1028 mm., Black		**68009**
CF FAN 370		**2017 ->**
MX-11 270	270	367
After catalytic converter, 1028 mm., Black		**68009**
CF FAN 370, FAG 370		**2013 ->**
MX-11 271	271	370
After catalytic converter, 1028 mm., Black		**68009**
CF FAN 400, FAG 400		**2013 ->**
MX-11 291	291	396
After catalytic converter, 1028 mm., Black		**68009**
CF FAN 410		**2017 ->**
MX-11 300	300	408
After catalytic converter, 1028 mm., Black		**68009**
CF FAN 410		**2017 ->**
MX-11 300	300	408
After catalytic converter, 1028 mm., Black		**68009**
CF FAN 410, FAG 410		**2013 ->**
MX-13 303	303	412
After catalytic converter, 1028 mm., Black		**68009**
CF FAN 430		**2017 ->**
MX-13 315	315	428
After catalytic converter, 1028 mm., Black		**68009**
CF FAN 430		**2017 ->**
MX-13 315	315	428
After catalytic converter, 1028 mm., Black		**68009**
CF FAN 440, FAG 440		**2013 ->**
MX-11 320	320	435
After catalytic converter, 1028 mm., Black		**68009**
CF FAN 450		**2017 ->**
MX-11 330	330	449
After catalytic converter, 1028 mm., Black		**68009**
CF FAN 450		**2017 ->**
MX-11 330	330	449
After catalytic converter, 1028 mm., Black		**68009**
CF FAN 460, FAG 460		**2013 ->**
MX-13 340	340	462
After catalytic converter, 1028 mm., Black		**68009**
CF FAN 480		**2017 ->**
MX-13 355	355	483
After catalytic converter, 1028 mm., Black		**68009**
CF FAN 480		**2017 ->**
MX-13 355	355	483
After catalytic converter, 1028 mm., Black		**68009**
CF FAN 510, FAG 510		**2013 ->**
MX-13 375	375	510
After catalytic converter, 1028 mm., Black		**68009**
CF FAN 530		**2017 ->**
MX-13 390	390	530
After catalytic converter, 1028 mm., Black		**68009**
CF FAN 530		**2017 ->**
MX-13 390	390	530
After catalytic converter, 1028 mm., Black		**68009**
CF FAQ 400, FAX 400		**2015 ->**
MX-11 291	291	396
After catalytic converter, 1028 mm., Black		**68009**
CF FAQ 410, FAX 410		**2015 ->**
MX-13 303	303	412
After catalytic converter, 1028 mm., Black		**68009**
CF FAQ 440, FAX 440		**2015 ->**
MX-11 320	320	435
After catalytic converter, 1028 mm., Black		**68009**
CF FAQ 460, FAX 460		**2015 ->**
MX-13 340	340	462
After catalytic converter, 1028 mm., Black		**68009**
CF FAQ 510, FAX 510		**2015 ->**
MX-13 375	375	510
After catalytic converter, 1028 mm., Black		**68009**

DAF Cont.		
CF FAR 280		**2015 ->**
PX-7 208	208	283
After catalytic converter, 1028 mm., Black		**68009**
CF FAR 290, FAS 290		**2013 ->**
MX-11 210	210	286
After catalytic converter, 1028 mm., Black		**68009**
CF FAR 300		**2017 ->**
MX-11 220	220	299
After catalytic converter, 1028 mm., Black		**68009**
CF FAR 310		**2015 ->**
PX-7 231	231	314
After catalytic converter, 1028 mm., Black		**68009**
CF FAR 330, FAS 330		**2013 ->**
MX-11 240	240	326
After catalytic converter, 1028 mm., Black		**68009**
CF FAR 340		**2017 ->**
MX-11 251	251	341
After catalytic converter, 1028 mm., Black		**68009**
CF FAR 370		**2017 ->**
MX-11 270	270	367
After catalytic converter, 1028 mm., Black		**68009**
CF FAR 370		**2017 ->**
MX-11 270	270	367
After catalytic converter, 1028 mm., Black		**68009**
CF FAR 370, FAS 370		**2013 ->**
MX-11 271	271	370
After catalytic converter, 1028 mm., Black		**68009**
CF FAR 400, FAS 400		**2013 ->**
MX-11 291	291	396
After catalytic converter, 1028 mm., Black		**68009**
CF FAR 410		**2017 ->**
MX-11 300	300	408
After catalytic converter, 1028 mm., Black		**68009**
CF FAR 410		**2017 ->**
MX-11 300	300	408
After catalytic converter, 1028 mm., Black		**68009**
CF FAR 410, FAS 410		**2013 ->**
MX-13 303	303	412
After catalytic converter, 1028 mm., Black		**68009**
CF FAR 430		**2017 ->**
MX-13 315	315	428
After catalytic converter, 1028 mm., Black		**68009**
CF FAR 430		**2017 ->**
MX-13 315	315	428
After catalytic converter, 1028 mm., Black		**68009**
CF FAR 440, FAS 440		**2013 ->**
MX-11 320	320	435
After catalytic converter, 1028 mm., Black		**68009**
CF FAR 450		**2017 ->**
MX-11 330	330	449
After catalytic converter, 1028 mm., Black		**68009**
CF FAR 450		**2017 ->**
MX-11 330	330	449
After catalytic converter, 1028 mm., Black		**68009**
CF FAR 460, FAS 460		**2013 ->**
MX-13 340	340	462
After catalytic converter, 1028 mm., Black		**68009**
CF FAR 480		**2017 ->**
MX-13 355	355	483
After catalytic converter, 1028 mm., Black		**68009**
CF FAR 480		**2017 ->**
MX-13 355	355	483
After catalytic converter, 1028 mm., Black		**68009**
CF FAR 510, FAS 510		**2013 ->**
MX-13 375	375	510
After catalytic converter, 1028 mm., Black		**68009**
CF FAR 530		**2017 ->**
MX-13 390	390	530
After catalytic converter, 1028 mm., Black		**68009**
CF FAR 530		**2017 ->**
MX-13 390	390	530
After catalytic converter, 1028 mm., Black		**68009**
CF FAS 300		**2017 ->**
MX-11 220	220	299
After catalytic converter, 1028 mm., Black		**68009**
CF FAS 340		**2017 ->**
MX-11 251	251	341
After catalytic converter, 1028 mm., Black		**68009**
CF FAS 370		**2017 ->**
MX-11 270	270	367
After catalytic converter, 1028 mm., Black		**68009**
CF FAS 430		**2017 ->**
MX-13 315	315	428
After catalytic converter, 1028 mm., Black		**68009**

DAF Cont.

CF FAS 450			**2017 ->**
MX-11 330	330	449	
After catalytic converter, 1028 mm., Black			**68009**
CF FAS 480			**2017 ->**
MX-13 355	355	483	
After catalytic converter, 1028 mm., Black			**68009**
CF FAS 530			**2017 ->**
MX-13 390	390	530	
After catalytic converter, 1028 mm., Black			**68009**
CF FAT 290			**2013 ->**
MX-11 210	210	286	
After catalytic converter, 1028 mm., Black			**68009**
CF FAT 290			**2013 ->**
MX-11 210	210	286	
After catalytic converter, 1028 mm., Black			**68009**
CF FAT 300			**2017 ->**
MX-11 220	220	299	
After catalytic converter, 1028 mm., Black			**68009**
CF FAT 300			**2017 ->**
MX-11 220	220	299	
After catalytic converter, 1028 mm., Black			**68009**
CF FAT 330			**2013 ->**
MX-11 240	240	326	
After catalytic converter, 1028 mm., Black			**68009**
CF FAT 330			**2013 ->**
MX-11 240	240	326	
After catalytic converter, 1028 mm., Black			**68009**
CF FAT 340			**2017 ->**
MX-11 251	251	341	
After catalytic converter, 1028 mm., Black			**68009**
CF FAT 340			**2017 ->**
MX-11 251	251	341	
After catalytic converter, 1028 mm., Black			**68009**
CF FAT 370			**2013 ->**
MX-11 271	271	370	
After catalytic converter, 1028 mm., Black			**68009**
CF FAT 370			**2013 ->**
MX-11 271	271	370	
After catalytic converter, 1028 mm., Black			**68009**
CF FAT 370			**2017 ->**
MX-11 270	270	367	
After catalytic converter, 1028 mm., Black			**68009**
CF FAT 370			**2017 ->**
MX-11 270	270	367	
After catalytic converter, 1028 mm., Black			**68009**
CF FAT 400			**2013 ->**
MX-11 291	291	396	
After catalytic converter, 1028 mm., Black			**68009**
CF FAT 400			**2013 ->**
MX-11 291	291	396	
After catalytic converter, 1028 mm., Black			**68009**
CF FAT 410			**2013 ->**
MX-13 303	303	412	
After catalytic converter, 1028 mm., Black			**68009**
CF FAT 410			**2013 ->**
MX-13 303	303	412	
After catalytic converter, 1028 mm., Black			**68009**
CF FAT 410			**2017 ->**
MX-11 300	300	408	
After catalytic converter, 1028 mm., Black			**68009**
CF FAT 410			**2017 ->**
MX-11 300	300	408	
After catalytic converter, 1028 mm., Black			**68009**
CF FAT 430			**2017 ->**
MX-13 315	315	428	
After catalytic converter, 1028 mm., Black			**68009**
CF FAT 430			**2017 ->**
MX-13 315	315	428	
After catalytic converter, 1028 mm., Black			**68009**
CF FAT 440			**2013 ->**
MX-11 320	320	435	
After catalytic converter, 1028 mm., Black			**68009**
CF FAT 440			**2013 ->**
MX-11 320	320	435	
After catalytic converter, 1028 mm., Black			**68009**
CF FAT 450			**2017 ->**
MX-11 330	330	449	
After catalytic converter, 1028 mm., Black			**68009**
CF FAT 450			**2017 ->**
MX-11 330	330	449	
After catalytic converter, 1028 mm., Black			**68009**
CF FAT 460			**2013 ->**
MX-13 340	340	462	
After catalytic converter, 1028 mm., Black			**68009**

DAF Cont.

CF FAT 460			**2013 ->**
MX-13 340	340	462	
After catalytic converter, 1028 mm., Black			**68009**
CF FAT 480			**2017 ->**
MX-13 355	355	483	
After catalytic converter, 1028 mm., Black			**68009**
CF FAT 480			**2017 ->**
MX-13 355	355	483	
After catalytic converter, 1028 mm., Black			**68009**
CF FAT 510			**2013 ->**
MX-13 375	375	510	
After catalytic converter, 1028 mm., Black			**68009**
CF FAT 510			**2013 ->**
MX-13 375	375	510	
After catalytic converter, 1028 mm., Black			**68009**
CF FT 290			**2013 ->**
MX-11 210	210	286	
After catalytic converter, 1028 mm., Black			**68009**
CF FT 330			**2013 ->**
MX-11 240	240	326	
After catalytic converter, 1028 mm., Black			**68009**
CF FT 370			**2013 ->**
MX-11 271	271	368	
After catalytic converter, 1028 mm., Black			**68009**
CF FT 400			**2013 ->**
MX-11 291	291	396	
After catalytic converter, 1028 mm., Black			**68009**
CF FT 400			**2013 ->**
MX-11 291	291	396	
After catalytic converter, 1028 mm., Black			**68009**
CF FT 410			**2013 ->**
MX-13 303	303	412	
After catalytic converter, 1028 mm., Black			**68009**
CF FT 410			**2013 ->**
MX-13 303	303	412	
After catalytic converter, 1028 mm., Black			**68009**
CF FT 440			**2013 ->**
MX-11 320	320	435	
After catalytic converter, 1028 mm., Black			**68009**
CF FT 440			**2013 ->**
MX-11 320	320	435	
After catalytic converter, 1028 mm., Black			**68009**
CF FT 460			**2013 ->**
MX-13 340	340	462	
After catalytic converter, 1028 mm., Black			**68009**
CF FT 460			**2013 ->**
MX-13 340	340	462	
After catalytic converter, 1028 mm., Black			**68009**
CF FT 510			**2013 ->**
MX-13 375	375	510	
After catalytic converter, 1028 mm., Black			**68009**
CF FT 510			**2013 ->**
MX-13 375	375	510	
After catalytic converter, 1028 mm., Black			**68009**
CF FTG 400			**2013 ->**
MX-11 291	291	396	
After catalytic converter, 1028 mm., Black			**68009**
CF FTG 410			**2013 ->**
MX-13 303	303	412	
After catalytic converter, 1028 mm., Black			**68009**
CF FTG 440			**2013 ->**
MX-11 320	320	435	
After catalytic converter, 1028 mm., Black			**68009**
CF FTG 460			**2013 ->**
MX-13 340	340	462	
After catalytic converter, 1028 mm., Black			**68009**
CF FTG 510			**2013 ->**
MX-13 375	375	510	
After catalytic converter, 1028 mm., Black			**68009**
CF FTP 400			**2013 ->**
MX-11 291	291	396	
After catalytic converter, 1028 mm., Black			**68009**
CF FTP 410			**2013 ->**
MX-13 303	303	412	
After catalytic converter, 1028 mm., Black			**68009**
CF FTP 440			**2013 ->**
MX-11 320	320	435	
After catalytic converter, 1028 mm., Black			**68009**
CF FTP 460			**2013 ->**
MX-13 340	340	462	
After catalytic converter, 1028 mm., Black			**68009**
CF FTP 510			**2013 ->**
MX-13 375	375	510	
After catalytic converter, 1028 mm., Black			**68009**

DAF Cont.

CF FTR 410			**2013 ->**
MX-13 303	303	412	
After catalytic converter, 1028 mm., Black			**68009**
CF FTR 460			**2013 ->**
MX-13 340	340	462	
After catalytic converter, 1028 mm., Black			**68009**
CF FTR 510			**2013 ->**
MX-13 375	375	510	
After catalytic converter, 1028 mm., Black			**68009**
CF FTS 410			**2013 ->**
MX-13 303	303	412	
After catalytic converter, 1028 mm., Black			**68009**
CF FTS 460			**2013 ->**
MX-13 340	340	462	
After catalytic converter, 1028 mm., Black			**68009**
CF FTS 510			**2013 ->**
MX-13 375	375	510	
After catalytic converter, 1028 mm., Black			**68009**
CF FTT 400			**2013 ->**
MX-11 291	291	396	
After catalytic converter, 1028 mm., Black			**68009**
CF FTT 410			**2013 ->**
MX-13 303	303	412	
After catalytic converter, 1028 mm., Black			**68009**
CF FTT 440			**2013 ->**
MX-11 320	320	435	
After catalytic converter, 1028 mm., Black			**68009**
CF FTT 460			**2013 ->**
MX-13 340	340	462	
After catalytic converter, 1028 mm., Black			**68009**
CF FTT 510			**2013 ->**
MX-13 375	375	510	
After catalytic converter, 1028 mm., Black			**68009**

IRISBUS

Arway 10.6M			**2005-13**
F2BE3681B	243	330	
After / Before SCR catalytic converter, 667 mm., Black			**68006**
Arway 10.6M			**2005-13**
F2BE3682A	280	381	
After / Before SCR catalytic converter, 667 mm., Black			**68006**
Arway 12.8M			**2005-13**
F2BE3682B	243	330	
After / Before SCR catalytic converter, 667 mm., Black			**68006**
Arway 12.8M			**2005-13**
F2BE3682A	280	381	
After / Before SCR catalytic converter, 667 mm., Black			**68006**
Arway 12M			**2005-13**
F2BE3682B	243	330	
After / Before SCR catalytic converter, 667 mm., Black			**68006**
Arway 12M			**2005-13**
F2BE3682A	280	381	
After / Before SCR catalytic converter, 667 mm., Black			**68006**
Arway 15M			**2005-13**
------	280	380	
After / Before SCR catalytic converter, 667 mm., Black			**68006**
Arway 15M			**2005-13**
------	331	450	
After / Before SCR catalytic converter, 667 mm., Black			**68006**
Citelis 10 CNG			**2005-13**
F2BE0642A	199	271	
After / Before SCR catalytic converter, 667 mm., Black			**68006**
Citelis 10 CNG			**2005-13**
F2BE0642C	228	310	
After / Before SCR catalytic converter, 667 mm., Black			**68006**
Citelis 10.5, 12, LINE			**2005 ->**
F2BE3682D, F2BE4682D	180	245	
After / Before SCR catalytic converter, 667 mm., Black			**68006**
Citelis 10.5, 12, Line			**2005-13**
F2BE3682C, F2BE4682C	213	290	
After / Before SCR catalytic converter, 667 mm., Black			**68006**
Citelis 12 CNG			**2005-13**
F2BE0642A, F2BE0642B	199	271	
After / Before SCR catalytic converter, 667 mm., Black			**68006**
Citelis 18 CNG			**2005 ->**
------	200	272	
After / Before SCR catalytic converter, 667 mm., Black			**68006**
Citelis 18 CNG			**2005 ->**
------	228	310	
After / Before SCR catalytic converter, 667 mm., Black			**68006**
Citelis 18 M			**2005-13**
F2BE3682C	213	290	
After / Before SCR catalytic converter, 667 mm., Black			**68006**

IRISBUS Cont.

Citelis 18 M			**2005-13**
F2BE3682A	280	381	
After / Before SCR catalytic converter, 667 mm., Black			**68006**
Crealis 12, 12 NEO			**2009 ->**
------	180	245	
After / Before SCR catalytic converter, 667 mm., Black			**68006**
Crealis 12, 12 NEO			**2009 ->**
------	213	290	
After / Before SCR catalytic converter, 667 mm., Black			**68006**
Crealis 18 CNG, 18 NEO CNG			**2009 ->**
F2BE0642D	243	330	
After / Before SCR catalytic converter, 667 mm., Black			**68006**
Crealis 18, 18 NEO			**2009 ->**
------	213	290	
After / Before SCR catalytic converter, 667 mm., Black			**68006**
Crossway 10.6M			**2006 ->**
F2BE3682B	243	330	
After / Before SCR catalytic converter, 667 mm., Black			**68006**
Crossway 10.6M			**2006 ->**
------	280	381	
After / Before SCR catalytic converter, 667 mm., Black			**68006**
Crossway 12.8M			**2006 ->**
F2BE3682B	243	330	
After / Before SCR catalytic converter, 667 mm., Black			**68006**
Crossway 12.8M			**2006 ->**
F2BE3682A	280	381	
After / Before SCR catalytic converter, 667 mm., Black			**68006**
Crossway 12M			**2006 ->**
F2BE3682B	243	330	
After / Before SCR catalytic converter, 667 mm., Black			**68006**
Crossway 12M			**2006 ->**
F2BE3682A	280	381	
After / Before SCR catalytic converter, 667 mm., Black			**68006**
Crossway LE 12.8M			**2006 ->**
F2BE3682B	243	330	
After / Before SCR catalytic converter, 667 mm., Black			**68006**
Crossway LE 12.8M			**2006 ->**
F2BE3682A	280	381	
After / Before SCR catalytic converter, 667 mm., Black			**68006**
Crossway LE 12M			**2006 ->**
------	194	264	
After / Before SCR catalytic converter, 667 mm., Black			**68006**
Crossway LE 12M			**2006 ->**
F2BE3682B	243	330	
After / Before SCR catalytic converter, 667 mm., Black			**68006**
Crossway LE 12M			**2006 ->**
F2BE3682A	280	381	
After / Before SCR catalytic converter, 667 mm., Black			**68006**
Domino 2001			**2003 ->**
------	254	345	
After / Before SCR catalytic converter, 667 mm., Black			**68006**
Domino HD			**2006 ->**
------	280	380	
After / Before SCR catalytic converter, 667 mm., Black			**68006**
Domino HD			**2003-08**
F3AE0681D	316	430	
After / Before SCR catalytic converter, 667 mm., Black			**68006**
Domino HD, HDH			**2006 ->**
------	330	450	
After / Before SCR catalytic converter, 667 mm., Black			**68006**
Evadys H 12.8M			**2003 ->**
------	280	381	
After / Before SCR catalytic converter, 667 mm., Black			**68006**
Evadys H 12.8M			**2003 ->**
F2BE3682B	243	330	
After / Before SCR catalytic converter, 667 mm., Black			**68006**
Evadys H 12M			**2003 ->**
------	280	381	
After / Before SCR catalytic converter, 667 mm., Black			**68006**
Evadys H 12M			**2003 ->**
F2BE3682A	280	381	
After / Before SCR catalytic converter, 667 mm., Black			**68006**
Evadys H 12M			**2003 ->**
F2BE3682B	243	330	
After / Before SCR catalytic converter, 667 mm., Black			**68006**
Evadys HD 12M			**2003 ->**
------	280	381	
After / Before SCR catalytic converter, 667 mm., Black			**68006**
Evadys HD 12M			**2003 ->**
------	330	450	
After / Before SCR catalytic converter, 667 mm., Black			**68006**
Magelys HD			**2008-13**
------	280	381	
After / Before SCR catalytic converter, 667 mm., Black			**68006**

IRISBUS Cont.

Magelys HD		**2008-13**
------	330	450
After / Before SCR catalytic converter, 667 mm., Black		**68006**
Midirider 300		**2007 ->**
F4AE3681A	220	299
After / Before SCR catalytic converter, 667 mm., Black		**68006**
Proway Short, Long		**2009 ->**
F4AE3681B	160	217
After / Before SCR catalytic converter, 667 mm., Black		**68006**
Recreo 12m, 12.8m		**2003-07**
------	228	310
After / Before SCR catalytic converter, 667 mm., Black		**68006**

IVECO

Eurocargo I-III 100 E 21 K tector, 100 E 21 DK tector		**2000-15**
F4AE0681D	154	209
After / Before SCR catalytic converter, 667 mm., Black		**68006**
Eurocargo I-III 100 E 21 W tector, 100 E 21 WS tector		**2000-15**
F4AE0681D	154	209
After / Before SCR catalytic converter, 667 mm., Black		**68006**
EuroCargo I-III 100 E 21, 100 E 21 DP tector, 100 E 22 tector		**2000-15**
F4AE0681D, F4AE0681D, F4AE0681D, F4AE0681D, F4AE3681B	154	209
After / Before SCR catalytic converter, 667 mm., Black		**68006**
EuroCargo I-III 100 E 21, 100 E 21 P		**1991-15**
8060.45.4100 TCA, 8060.45.4180	152	207
After / Before SCR catalytic converter, 667 mm., Black		**68006**
EuroCargo I-III 100 E 22 K tector		**2006-15**
F4AE3681B	160	218
After / Before SCR catalytic converter, 667 mm., Black		**68006**
EuroCargo I-III 100 E 22 tector, 100 E 22 P tector, 100 E 22 FP		**2006-15**
F4AE3681B	160	218
After / Before SCR catalytic converter, 667 mm., Black		**68006**
EuroCargo I-III 100 E 22 W tector, 100 E 22 WS tector		**2006-15**
F4AE3681B	160	218
After / Before SCR catalytic converter, 667 mm., Black		**68006**
EuroCargo I-III 120 E 20 CNG, 120 E 20 P CNG		**2006-15**
F4BE0611A	147	200
After / Before SCR catalytic converter, 667 mm., Black		**68006**
Eurocargo I-III 120 E 21 H		**1992-15**
8060.45B.5100	152	207
After / Before SCR catalytic converter, 667 mm., Black		**68006**
EuroCargo I-III 120 E 21 K tector		**2000-15**
F4AE0681D	154	209
After / Before SCR catalytic converter, 667 mm., Black		**68006**
EuroCargo I-III 120 E 21 tector,120 E 21 P tector, 120 E 21 FP tector		**2000-15**
F4AE0681C, F4AE0681D, F4AE3681B	154	209
After / Before SCR catalytic converter, 667 mm., Black		**68006**
EuroCargo I-III 120 E 22 D tector, 120 E 22 P tector, 120 E 22 FP		**2006-15**
F4AE3681B	160	218
After / Before SCR catalytic converter, 667 mm., Black		**68006**
EuroCargo I-III 120 E 22 K tector		**2006-15**
F4AE3681B	160	218
After / Before SCR catalytic converter, 667 mm., Black		**68006**
EuroCargo I-III 120 EL 21, 120 EL 21 P tector, 120 E 22, 120 EL 22		**2000-15**
F4AE0681C, F4AE0681D, F4AE3681B, F4AE3681B	154	209
After / Before SCR catalytic converter, 667 mm., Black		**68006**
EuroCargo I-III 140 E 21 K		**2005-15**
F4AE0681D	154	209
After / Before SCR catalytic converter, 667 mm., Black		**68006**
EuroCargo I-III 140 E 21 tector, 140 E 21 P, 140 E 21 FP		**2005-15**
F4AE0681C, F4AE0681D	154	209
After / Before SCR catalytic converter, 667 mm., Black		**68006**
EuroCargo I-III 140 E 22 K tector		**2006-15**
F4AE3681B	160	218
After / Before SCR catalytic converter, 667 mm., Black		**68006**
EuroCargo I-III 140 E 22 tector, 140 E 22 P tector, 140 E 22 D FP		**2006-15**
F4AE3681B	160	218
After / Before SCR catalytic converter, 667 mm., Black		**68006**
EuroCargo I-III 140 E 24 W tector, 140 E 24 WS tector		**2000-15**
F4AE0681B	176	240
After / Before SCR catalytic converter, 667 mm., Black		**68006**
EuroCargo I-III 140 E 25 K tector, 140 E 25 DK tector		**2006-15**
F4AE3681D	185	251
After / Before SCR catalytic converter, 667 mm., Black		**68006**
EuroCargo I-III 140 E 25 W tector, 140 E 25 WS tector		**2006-15**
F4AE3681D	185	251
After / Before SCR catalytic converter, 667 mm., Black		**68006**
EuroCargo I-III 140 E 28 K tector		**2006-15**
F4AE0681A, F4AE3681E	202	275
After / Before SCR catalytic converter, 667 mm., Black		**68006**
EuroCargo I-III 140 E 28 tector, 140 E 28 P tector, 140 E 28 FP		**2006-15**
F4AE0681A, F4AE3681E	202	275
After / Before SCR catalytic converter, 667 mm., Black		**68006**

IVECO Cont.

EuroCargo I-III 140 E 28 W tector, 140 E 28 WS tector		**2006-15**
F4AE3681E	205	279
After / Before SCR catalytic converter, 667 mm., Black		**68006**
EuroCargo I-III 140 E D 25 tector, 140 E 25 P tector, 140 E 25 FP		**2006-15**
F4AE3681D	185	251
After / Before SCR catalytic converter, 667 mm., Black		**68006**
EuroCargo I-III 150 E 24 tector, 150 E 25 tector		**2000-15**
F4AE0681B, F4AE0681B, F4AE0681B, F4AE0681B, F4AE3681D,	176	240
After / Before SCR catalytic converter, 667 mm., Black		**68006**
EuroCargo I-III 150 E 25 K tector		**2006-15**
F4AE3681D	185	252
After / Before SCR catalytic converter, 667 mm., Black		**68006**
EuroCargo I-III 150 E 25 W tector		**2006-15**
F4AE3681D	185	252
After / Before SCR catalytic converter, 667 mm., Black		**68006**
EuroCargo I-III 150 E 25 WS tector		**2006-15**
F4AE3681D	185	252
After / Before SCR catalytic converter, 667 mm., Black		**68006**
EuroCargo I-III 150 E 28 K tector		**2000-15**
F4AE0681A, F4AE3681E	202	275
After / Before SCR catalytic converter, 667 mm., Black		**68006**
EuroCargo I-III 150 E 28 tector		**2000-15**
F4AE0681A, F4AE0681A, F4AE0681A, F4AE0681A, F4AE3681E,	202	275
After / Before SCR catalytic converter, 667 mm., Black		**68006**
EuroCargo I-III 150 E 28 W tector		**2006-15**
F4AE3681E	202	275
After / Before SCR catalytic converter, 667 mm., Black		**68006**
EuroCargo I-III 150 E 28 WS tector		**2006-15**
F4AE3681E	205	279
After / Before SCR catalytic converter, 667 mm., Black		**68006**
EuroCargo I-III 160 E 21 tector, 160 E 21 P tector		**2000-15**
F4AE0681C, F4AE0681D	154	209
After / Before SCR catalytic converter, 667 mm., Black		**68006**
EuroCargo I-III 160 E 22 K tector		**2006-15**
F4AE3681B	160	218
After / Before SCR catalytic converter, 667 mm., Black		**68006**
EuroCargo I-III 160 E 22 tector, 160 E 22 P tector		**2006-15**
F4AE3681B	160	218
After / Before SCR catalytic converter, 667 mm., Black		**68006**
EuroCargo I-III 160 E 25 K tector		**2006-15**
F4AE3681D	185	252
After / Before SCR catalytic converter, 667 mm., Black		**68006**
EuroCargo I-III 160 E 25 tector, 160 E 25 P tector		**2006-15**
F4AE3681D	185	252
After / Before SCR catalytic converter, 667 mm., Black		**68006**
EuroCargo I-III 160 E 28 K tector		**2006-15**
F4AE3681E	205	279
After / Before SCR catalytic converter, 667 mm., Black		**68006**
EuroCargo I-III 160 E 28 tector, 160 E 28 P tector		**2000-15**
F4AE0681A, F4AE3681E	202	275
After / Before SCR catalytic converter, 667 mm., Black		**68006**
EuroCargo I-III 180 E 22 tector, 180 E 22 P tector		**2006-15**
F4AE3681B	160	218
After / Before SCR catalytic converter, 667 mm., Black		**68006**
EuroCargo I-III 180 E 24, 180 E 25 tector		**2000-15**
F4AE0681B, F4AE0681B, F4AE0681B, F4AE3681D, F4AE3681D	176	240
After / Before SCR catalytic converter, 667 mm., Black		**68006**
EuroCargo I-III 180 E 25 K tector		**2006-15**
F4AE3681D	185	252
After / Before SCR catalytic converter, 667 mm., Black		**68006**
EuroCargo I-III 180 E 28 K tector		**2000-15**
F4AE0681A, F4AE3681E	202	275
After / Before SCR catalytic converter, 667 mm., Black		**68006**
EuroCargo I-III 180 E 28 tector, 180 E 28 P tector		**2000-15**
F4AE0681A, F4AE0681A, F4AE0681A, F4AE3681E, F4AE3681E,	202	275
After / Before SCR catalytic converter, 667 mm., Black		**68006**
EuroCargo I-III 180 E 30 K tector		**2006-15**
F4AE0681A, F4AE3681A	220	299
After / Before SCR catalytic converter, 667 mm., Black		**68006**
EuroCargo I-III 180 E 30 tector, 180 E 30 P tector		**2006-15**
F4AE0681A, F4AE3681A	220	299
After / Before SCR catalytic converter, 667 mm., Black		**68006**
EuroCargo I-III 75 E 16 K tector		**2006-15**
F4AE3481D	118	160
After / Before SCR catalytic converter, 667 mm., Black		**68006**
EuroCargo I-III 75 E 16 tector, 75 E 16 P tector		**2006-15**
F4AE3481D	118	160
After / Before SCR catalytic converter, 667 mm., Black		**68006**
Eurocargo IV 100E.19		**2013 ->**
F4AFE411B	137	186
After / Before SCR catalytic converter, 667 mm., Black		**68006**
Eurocargo IV 100E.19FP		**2013 ->**
F4AFE411B	137	186
After / Before SCR catalytic converter, 667 mm., Black		**68006**

IVECO Cont.

Eurocargo IV 100E.19P			**2013 ->**
F4AFE411B	137	186	
After / Before SCR catalytic converter, 667 mm., Black			**68006**
Eurocargo IV 100E.21			**2013 ->**
F4AFE411C	152	207	
After / Before SCR catalytic converter, 667 mm., Black			**68006**
Eurocargo IV 100E.21FP			**2013 ->**
F4AFE411C	152	207	
After / Before SCR catalytic converter, 667 mm., Black			**68006**
Eurocargo IV 100E.21P			**2013 ->**
F4AFE411C	152	207	
After / Before SCR catalytic converter, 667 mm., Black			**68006**
Eurocargo IV 100E.22			**2013 ->**
F4AFE611A	162	220	
After / Before SCR catalytic converter, 667 mm., Black			**68006**
Eurocargo IV 100E.22FP			**2013 ->**
F4AFE611A	162	220	
After / Before SCR catalytic converter, 667 mm., Black			**68006**
Eurocargo IV 100E.22P			**2013 ->**
F4AFE611A	162	220	
After / Before SCR catalytic converter, 667 mm., Black			**68006**
Eurocargo IV 120E.19			**2013 ->**
F4AFE411B	137	186	
After / Before SCR catalytic converter, 667 mm., Black			**68006**
Eurocargo IV 120E.19FP			**2013 ->**
F4AFE411B	137	186	
After / Before SCR catalytic converter, 667 mm., Black			**68006**
Eurocargo IV 120E.19P			**2013 ->**
F4AFE411B	137	186	
After / Before SCR catalytic converter, 667 mm., Black			**68006**
Eurocargo IV 120E.21			**2013 ->**
F4AFE411C	152	207	
After / Before SCR catalytic converter, 667 mm., Black			**68006**
Eurocargo IV 120E.21P			**2013 ->**
F4AFE411C	152	207	
After / Before SCR catalytic converter, 667 mm., Black			**68006**
Eurocargo IV 120E.22			**2013 ->**
F4AFE611A	162	220	
After / Before SCR catalytic converter, 667 mm., Black			**68006**
Eurocargo IV 120E.22FP			**2013 ->**
F4AFE611A	162	220	
After / Before SCR catalytic converter, 667 mm., Black			**68006**
Eurocargo IV 120E.22P			**2013 ->**
F4AFE611A	162	220	
After / Before SCR catalytic converter, 667 mm., Black			**68006**
Eurocargo IV 140E.19			**2013 ->**
F4AFE411B	137	186	
After / Before SCR catalytic converter, 667 mm., Black			**68006**
Eurocargo IV 140E.19FP			**2013 ->**
F4AFE411B	137	186	
After / Before SCR catalytic converter, 667 mm., Black			**68006**
Eurocargo IV 140E.19P			**2013 ->**
F4AFE411B	137	186	
After / Before SCR catalytic converter, 667 mm., Black			**68006**
Eurocargo IV 140E.21			**2013 ->**
F4AFE411C	152	207	
After / Before SCR catalytic converter, 667 mm., Black			**68006**
Eurocargo IV 140E.21P			**2013 ->**
F4AFE411C	152	207	
After / Before SCR catalytic converter, 667 mm., Black			**68006**
Eurocargo IV 140E.22			**2013 ->**
F4AFE611A	162	220	
After / Before SCR catalytic converter, 667 mm., Black			**68006**
Eurocargo IV 140E.22FP			**2013 ->**
F4AFE611A	162	220	
After / Before SCR catalytic converter, 667 mm., Black			**68006**
Eurocargo IV 140E.22P			**2013 ->**
F4AFE611A	162	220	
After / Before SCR catalytic converter, 667 mm., Black			**68006**
Eurocargo IV 140E.25			**2013 ->**
F4AFE611E	185	252	
After / Before SCR catalytic converter, 667 mm., Black			**68006**
Eurocargo IV 140E.25FP			**2013 ->**
F4AFE611E	185	252	
After / Before SCR catalytic converter, 667 mm., Black			**68006**
Eurocargo IV 140E.25P			**2013 ->**
F4AFE611E	185	252	
After / Before SCR catalytic converter, 667 mm., Black			**68006**
Eurocargo IV 140E.28			**2013 ->**
F4AFE611C	206	280	
After / Before SCR catalytic converter, 667 mm., Black			**68006**
Eurocargo IV 140E.28FP			**2013 ->**
F4AFE611C	206	280	
After / Before SCR catalytic converter, 667 mm., Black			**68006**

FAE

IVECO Cont.

Eurocargo IV 140E.28P			**2013 ->**
F4AFE611C	206	280	
After / Before SCR catalytic converter, 667 mm., Black			**68006**
Eurocargo IV 150E.25			**2013 ->**
F4AFE611E	185	252	
After / Before SCR catalytic converter, 667 mm., Black			**68006**
Eurocargo IV 150E.25FP			**2013 ->**
F4AFE611E	185	252	
After / Before SCR catalytic converter, 667 mm., Black			**68006**
Eurocargo IV 150E.25P			**2013 ->**
F4AFE611E	185	252	
After / Before SCR catalytic converter, 667 mm., Black			**68006**
Eurocargo IV 150E.25W			**2013 ->**
F4AFE611E	185	252	
After / Before SCR catalytic converter, 667 mm., Black			**68006**
Eurocargo IV 150E.28			**2013 ->**
F4AFE611C	206	280	
After / Before SCR catalytic converter, 667 mm., Black			**68006**
Eurocargo IV 150E.28FP			**2013 ->**
F4AFE611C	206	280	
After / Before SCR catalytic converter, 667 mm., Black			**68006**
Eurocargo IV 150E.28P			**2013 ->**
F4AFE611C	206	280	
After / Before SCR catalytic converter, 667 mm., Black			**68006**
Eurocargo IV 150E.28W			**2013 ->**
F4AFE611C	206	280	
After / Before SCR catalytic converter, 667 mm., Black			**68006**
Eurocargo IV 150E.32			**2013 ->**
F4AFE611D	235	320	
After / Before SCR catalytic converter, 667 mm., Black			**68006**
Eurocargo IV 150E.32FP			**2013 ->**
F4AFE611D	235	320	
After / Before SCR catalytic converter, 667 mm., Black			**68006**
Eurocargo IV 150E.32P			**2013 ->**
F4AFE611D	235	320	
After / Before SCR catalytic converter, 667 mm., Black			**68006**
Eurocargo IV 160E.19			**2013 ->**
F4AFE411B	137	186	
After / Before SCR catalytic converter, 667 mm., Black			**68006**
Eurocargo IV 160E.19P			**2013 ->**
F4AFE411B	137	186	
After / Before SCR catalytic converter, 667 mm., Black			**68006**
Eurocargo IV 160E.21			**2013 ->**
F4AFE411C	152	207	
After / Before SCR catalytic converter, 667 mm., Black			**68006**
Eurocargo IV 160E.21P			**2013 ->**
F4AFE411C	152	207	
After / Before SCR catalytic converter, 667 mm., Black			**68006**
Eurocargo IV 160E.22			**2013 ->**
F4AFE611A	162	220	
After / Before SCR catalytic converter, 667 mm., Black			**68006**
Eurocargo IV 160E.22FP			**2013 ->**
F4AFE611A	162	220	
After / Before SCR catalytic converter, 667 mm., Black			**68006**
Eurocargo IV 160E.22P			**2013 ->**
F4AFE611A	162	220	
After / Before SCR catalytic converter, 667 mm., Black			**68006**
Eurocargo IV 160E.25			**2013 ->**
F4AFE611E	185	252	
After / Before SCR catalytic converter, 667 mm., Black			**68006**
Eurocargo IV 160E.25FP			**2013 ->**
F4AFE611E	185	252	
After / Before SCR catalytic converter, 667 mm., Black			**68006**
Eurocargo IV 160E.25P			**2013 ->**
F4AFE611E	185	252	
After / Before SCR catalytic converter, 667 mm., Black			**68006**
Eurocargo IV 160E.28			**2013 ->**
F4AFE611C	206	280	
After / Before SCR catalytic converter, 667 mm., Black			**68006**
Eurocargo IV 160E.28FP			**2013 ->**
F4AFE611C	206	280	
After / Before SCR catalytic converter, 667 mm., Black			**68006**
Eurocargo IV 160E.28P			**2013 ->**
F4AFE611C	206	280	
After / Before SCR catalytic converter, 667 mm., Black			**68006**
Eurocargo IV 160E.32			**2013 ->**
F4AFE611D	235	320	
After / Before SCR catalytic converter, 667 mm., Black			**68006**
Eurocargo IV 160E.32FP			**2013 ->**
F4AFE611D	235	320	
After / Before SCR catalytic converter, 667 mm., Black			**68006**
Eurocargo IV 160E.32P			**2013 ->**
F4AFE611D	235	320	
After / Before SCR catalytic converter, 667 mm., Black			**68006**

IVECO Cont.			
Eurocargo IV 180E.25			**2013 ->**
F4AFE611E	185	252	
After / Before SCR catalytic converter, 667 mm., Black			**68006**
Eurocargo IV 180E.25P			**2013 ->**
F4AFE611E	185	252	
After / Before SCR catalytic converter, 667 mm., Black			**68006**
Eurocargo IV 180E.28			**2013 ->**
F4AFE611C	206	280	
After / Before SCR catalytic converter, 667 mm., Black			**68006**
Eurocargo IV 180E.28P			**2013 ->**
F4AFE611C	206	280	
After / Before SCR catalytic converter, 667 mm., Black			**68006**
Eurocargo IV 180E.32			**2013 ->**
F4AFE611D	235	320	
After / Before SCR catalytic converter, 667 mm., Black			**68006**
Eurocargo IV 180E.32P			**2013 ->**
F4AFE611D	235	320	
After / Before SCR catalytic converter, 667 mm., Black			**68006**
Eurocargo IV 75E.16			**2013 ->**
F4AFE411A	118	160	
After / Before SCR catalytic converter, 667 mm., Black			**68006**
Eurocargo IV 75E.16P			**2013 ->**
F4AFE411A	118	160	
After / Before SCR catalytic converter, 667 mm., Black			**68006**
Eurocargo IV 75E.19			**2013 ->**
F4AFE411B	137	186	
After / Before SCR catalytic converter, 667 mm., Black			**68006**
Eurocargo IV 75E.19P			**2013 ->**
F4AFE411B	137	186	
After / Before SCR catalytic converter, 667 mm., Black			**68006**
Eurocargo IV 75E.21			**2013 ->**
F4AFE411C	152	207	
After / Before SCR catalytic converter, 667 mm., Black			**68006**
Eurocargo IV 75E.21P			**2013 ->**
F4AFE411C	152	207	
After / Before SCR catalytic converter, 667 mm., Black			**68006**
Eurocargo V 100E.19FP			**2015 ->**
F4AFE411F	137	186	
After / Before SCR catalytic converter, 667 mm., Black			**68006**
Eurocargo V 100E19, 100E19P			**2015 ->**
F4AFE411F	137	186	
After / Before SCR catalytic converter, 667 mm., Black			**68006**
Eurocargo V 100E21, 100E21P, 100E21FP			**2015 ->**
F4AFE411C	152	207	
After / Before SCR catalytic converter, 667 mm., Black			**68006**
Eurocargo V 100E22, 100E22P, 100E22FP			**2015 ->**
F4AFE611A	162	220	
After / Before SCR catalytic converter, 667 mm., Black			**68006**
Eurocargo V 120E.19FP			**2015 ->**
F4AFE411F	137	186	
After / Before SCR catalytic converter, 667 mm., Black			**68006**
Eurocargo V 120E.21FP			**2015 ->**
F4AFE411C	152	207	
After / Before SCR catalytic converter, 667 mm., Black			**68006**
Eurocargo V 120E19, 120E19P, 120EL19, 120EL19P			**2015 ->**
F4AFE411F	137	186	
After / Before SCR catalytic converter, 667 mm., Black			**68006**
Eurocargo V 120E21, 120E21P, 120EL21, 120EL21P			**2015 ->**
F4AFE411C	152	207	
After / Before SCR catalytic converter, 667 mm., Black			**68006**
Eurocargo V 120E22, 120E22P, 120E22FP, 120EL22, 120EL22P			**2015 ->**
F4AFE611A	162	220	
After / Before SCR catalytic converter, 667 mm., Black			**68006**
Eurocargo V 120EL.21			**2015 ->**
F4AFE411C	152	207	
After / Before SCR catalytic converter, 667 mm., Black			**68006**
Eurocargo V 120EL21 CNG, 12EL21P CNG			**2015 ->**
F4GFE601A	150	210	
After / Before SCR catalytic converter, 667 mm., Black			**68006**
Eurocargo V 140E.19FP			**2015 ->**
F4AFE411F	137	186	
After / Before SCR catalytic converter, 667 mm., Black			**68006**
Eurocargo V 140E.21FP			**2015 ->**
F4AFE411C	152	207	
After / Before SCR catalytic converter, 667 mm., Black			**68006**
Eurocargo V 140E19, 140E19P			**2015 ->**
F4AFE411F	137	186	
After / Before SCR catalytic converter, 667 mm., Black			**68006**
Eurocargo V 140E21, 140E21P			**2015 ->**
F4AFE411C	152	207	
After / Before SCR catalytic converter, 667 mm., Black			**68006**
Eurocargo V 140E22, 140E22FP, 140E22P			**2015 ->**
F4AFE611A	162	220	
After / Before SCR catalytic converter, 667 mm., Black			**68006**

FAE

IVECO Cont.			
Eurocargo V 140E25, 140E25FP, 140E25P			**2015 ->**
F4AFE611E	185	252	
After / Before SCR catalytic converter, 667 mm., Black			**68006**
Eurocargo V 140E28, 140E28FP, 140E28P			**2015 ->**
F4AFE611C	206	280	
After / Before SCR catalytic converter, 667 mm., Black			**68006**
Eurocargo V 150E25, 150E25FP, 150E25P			**2015 ->**
F4AFE611E	185	252	
After / Before SCR catalytic converter, 667 mm., Black			**68006**
Eurocargo V 150E25W			**2015 ->**
F4AFE611E	185	252	
After / Before SCR catalytic converter, 667 mm., Black			**68006**
Eurocargo V 150E28, 150E28FP, 150E28P			**2015 ->**
F4AFE611C	206	280	
After / Before SCR catalytic converter, 667 mm., Black			**68006**
Eurocargo V 150E28W			**2015 ->**
F4AFE611C	206	280	
After / Before SCR catalytic converter, 667 mm., Black			**68006**
Eurocargo V 150E32, 150E32FP, 150E32P			**2015 ->**
F4AFE611D	235	320	
After / Before SCR catalytic converter, 667 mm., Black			**68006**
Eurocargo V 160E.21 CNG			**2015 ->**
F4GFE601A	150	204	
After / Before SCR catalytic converter, 667 mm., Black			**68006**
Eurocargo V 160E.21P CNG			**2015 ->**
F4GFE601A	150	204	
After / Before SCR catalytic converter, 667 mm., Black			**68006**
Eurocargo V 160E.22FP			**2015 ->**
F4AFE611A	162	220	
After / Before SCR catalytic converter, 667 mm., Black			**68006**
Eurocargo V 160E21, 160E21P			**2015 ->**
F4AFE411C	152	207	
After / Before SCR catalytic converter, 667 mm., Black			**68006**
Eurocargo V 160E22, 160E22P			**2015 ->**
F4AFE611A	162	220	
After / Before SCR catalytic converter, 667 mm., Black			**68006**
Eurocargo V 160E25, 160E25FP, 160E25P			**2015 ->**
F4AFE611E	185	252	
After / Before SCR catalytic converter, 667 mm., Black			**68006**
Eurocargo V 160E28, 160E28FP, 160E28P			**2015 ->**
F4AFE611C	206	280	
After / Before SCR catalytic converter, 667 mm., Black			**68006**
Eurocargo V 160E32, 160E32FP, 160E32P			**2015 ->**
F4AFE611D	235	320	
After / Before SCR catalytic converter, 667 mm., Black			**68006**
Eurocargo V 180E25, 180E25FP, 180E25P			**2015 ->**
F4AFE611E	185	252	
After / Before SCR catalytic converter, 667 mm., Black			**68006**
Eurocargo V 180E28, 180E28P			**2015 ->**
F4AFE611C	206	280	
After / Before SCR catalytic converter, 667 mm., Black			**68006**
Eurocargo V 180E32, 180E32P			**2015 ->**
F4AFE611D	235	320	
After / Before SCR catalytic converter, 667 mm., Black			**68006**
Eurocargo V 75E16, 75E16P			**2015 ->**
F4AFE411E	118	160	
After / Before SCR catalytic converter, 667 mm., Black			**68006**
Eurocargo V 75E19, 75E19P			**2015 ->**
F4AFE411F	137	186	
After / Before SCR catalytic converter, 667 mm., Black			**68006**
Eurocargo V 75E21, 75E21P			**2015 ->**
F4AFE411C	152	207	
After / Before SCR catalytic converter, 667 mm., Black			**68006**
Eurofire 140 E 30 W tector			**2006 ->**
F4AE0681A, F4AE3681A	220	299	
After / Before SCR catalytic converter, 667 mm., Black			**68006**
Magelys Magelys Pro			**2011 ->**
------	294	400	
After / Before SCR catalytic converter, 667 mm., Black			**68006**
Stralis I AD 190S31, AT 190S31			**2004 ->**
F2BE3681C	228	310	
After / Before SCR catalytic converter, 667 mm., Black			**68006**
Stralis I AD 190S33, AT 190S33			**2007 ->**
F2BE3681B	243	330	
After / Before SCR catalytic converter, 667 mm., Black			**68006**
Stralis I AD 190S36, AT 190S36			**2007 ->**
F2BE3681A	265	360	
After / Before SCR catalytic converter, 667 mm., Black			**68006**
Stralis I AD 190S40, AT 190S40			**2003 ->**
F3AE0681B, F3AE0681H	294	400	
After / Before SCR catalytic converter, 667 mm., Black			**68006**
Stralis I AD 260S31, AT 260S31			**2003 ->**
F2BE0681B, F2BE3681C	228	310	
After / Before SCR catalytic converter, 667 mm., Black			**68006**

IVECO Cont.

Stralis I AD 260S31, AT 260S31			**2004 ->**
F2BE3681C	228	310	
After / Before SCR catalytic converter, 667 mm., Black			**68006**
Stralis I AD 260S31, AT 260S31			**2003 ->**
F2BE0681B, F2BE3681C	228	310	
After / Before SCR catalytic converter, 667 mm., Black			**68006**
Stralis I AD 260S31, AT 260S31			**2004 ->**
F2BE3681C	228	310	
After / Before SCR catalytic converter, 667 mm., Black			**68006**
Stralis I AD 260S33, AT 260S33			**2006 ->**
F2BE3681B	243	330	
After / Before SCR catalytic converter, 667 mm., Black			**68006**
Stralis I AD 260S33, AT 260S33			**2007 ->**
F2BE3681B	243	330	
After / Before SCR catalytic converter, 667 mm., Black			**68006**
Stralis I AD 260S33, AT 260S33			**2006 ->**
F2BE3681B	243	330	
After / Before SCR catalytic converter, 667 mm., Black			**68006**
Stralis I AD 260S33, AT 260S33			**2007 ->**
F2BE3681B	243	330	
After / Before SCR catalytic converter, 667 mm., Black			**68006**
Stralis I AD 260S36, AT 260S36			**2007 ->**
F2BE3681A	265	360	
After / Before SCR catalytic converter, 667 mm., Black			**68006**
Stralis I AD 260S36, AT 260S36			**2007 ->**
F2BE3681A	265	360	
After / Before SCR catalytic converter, 667 mm., Black			**68006**
Stralis I AD 260S40, AT 260S40			**2003 ->**
F3AE0681B, F3AE0681H	294	400	
After / Before SCR catalytic converter, 667 mm., Black			**68006**
Stralis I AD 260S40, AT 260S40			**2003 ->**
F3AE0681B, F3AE0681H	294	400	
After / Before SCR catalytic converter, 667 mm., Black			**68006**
Stralis I AD 260S42, AT 260S42			**2006 ->**
F3AE3681B	310	422	
After / Before SCR catalytic converter, 667 mm., Black			**68006**
Stralis I AD 260S42, AT 260S42, AS 260S42			**2007 ->**
F3AE3681B	310	422	
After / Before SCR catalytic converter, 667 mm., Black			**68006**
Stralis I AD 260S42, AT 260S42, AS 260S42			**2007 ->**
F3AE3681B	310	422	
After / Before SCR catalytic converter, 667 mm., Black			**68006**
Stralis I AD 260S45, AT 260S45			**2006 ->**
F3AE3681A	331	450	
After / Before SCR catalytic converter, 667 mm., Black			**68006**
Stralis I AD 260S45, AT 260S45, AS 260S45			**2007 ->**
F3AE3681A	331	450	
After / Before SCR catalytic converter, 667 mm., Black			**68006**
Stralis I AD 440S33, AT 440S33			**2006 ->**
F2BE3681B	243	330	
After / Before SCR catalytic converter, 667 mm., Black			**68006**
Stralis I AD 440S35, AT 440S35, AD 440S36, AT 440S36			**2003 ->**
F2BE0681A, F2BE3681A	259	352	
After / Before SCR catalytic converter, 667 mm., Black			**68006**
Stralis I AD 440S40, AT 440S40			**2003 ->**
F3AE0681B, F3AE0681H	294	400	
After / Before SCR catalytic converter, 667 mm., Black			**68006**
Stralis I AD 440S40, AT 440S40			**2003 ->**
F3AE0681B	294	400	
After / Before SCR catalytic converter, 667 mm., Black			**68006**
Stralis I AD 440S40, AT 440S40			**2003 ->**
F3AE0681B, F3AE0681H	294	400	
After / Before SCR catalytic converter, 667 mm., Black			**68006**
Stralis I AD 440S42, AT 440S42			**2006 ->**
F3AE3681B, F3AE3681D	310	422	
After / Before SCR catalytic converter, 667 mm., Black			**68006**
Stralis I AS 190S40			**2002 ->**
F3AE0681B, F3AE0681H	294	400	
After / Before SCR catalytic converter, 667 mm., Black			**68006**
Stralis I AS 190S48			**2002 ->**
F3BE0681E	353	480	
After / Before SCR catalytic converter, 667 mm., Black			**68006**
Stralis I AS 260S40			**2002 ->**
F3AE0681B, F3AE0681H	294	400	
After / Before SCR catalytic converter, 667 mm., Black			**68006**
Stralis I AS 260S40			**2002 ->**
F3AE0681B, F3AE0681H	294	400	
After / Before SCR catalytic converter, 667 mm., Black			**68006**
Stralis I AS 260S48			**2002 ->**
F3BE0681E	353	480	
After / Before SCR catalytic converter, 667 mm., Black			**68006**
Stralis I AS 260S48			**2002 ->**
F3BE0681E	353	480	
After / Before SCR catalytic converter, 667 mm., Black			**68006**

FAE

IVECO Cont.

Stralis I AS 440S40			**2002 ->**
F3AE0681B, F3AE0681H	294	400	
After / Before SCR catalytic converter, 667 mm., Black			**68006**
Stralis I AS 440S40			**2002 ->**
F3AE0681B	294	400	
After / Before SCR catalytic converter, 667 mm., Black			**68006**
Stralis I AS 440S40			**2002 ->**
F3AE0681H	294	400	
After / Before SCR catalytic converter, 667 mm., Black			**68006**
Stralis I AS 440S42			**2006 ->**
F3AE3681B, F3AE3681D	310	420	
After / Before SCR catalytic converter, 667 mm., Black			**68006**
Stralis I AS 440S42			**2006 ->**
F3AE3681B	310	420	
After / Before SCR catalytic converter, 667 mm., Black			**68006**
Stralis I AS 440S46			**2009 ->**
F3AE3681Y	338	460	
After / Before SCR catalytic converter, 667 mm., Black			**68006**
Stralis I AS 440S48			**2002 ->**
F3BE0681E, F3BE0681E, F3BE0681E	353	480	
After / Before SCR catalytic converter, 667 mm., Black			**68006**
Stralis I AS 440S48			**2002 ->**
F3BE0681E	353	480	
After / Before SCR catalytic converter, 667 mm., Black			**68006**
Stralis I AS 440S48			**2002 ->**
F3BE0681E	353	480	
After / Before SCR catalytic converter, 667 mm., Black			**68006**
Stralis I AS 440S48			**2002 ->**
F3BE0681E	353	480	
After / Before SCR catalytic converter, 667 mm., Black			**68006**
Stralis I AS 440S50, AT 440S50			**2006 ->**
F3BE3681B	368	500	
After / Before SCR catalytic converter, 667 mm., Black			**68006**
Stralis I AS 440S56, AT 440S56			**2006 ->**
F3BE3681A	412	560	
After / Before SCR catalytic converter, 667 mm., Black			**68006**
Stralis I AT 440S33 CNG			**2013 ->**
F2BE0641	243	330	
After / Before SCR catalytic converter, 667 mm., Black			**68006**
Stralis I AT 440S42			**2006 ->**
F3AE3681B	310	420	
After / Before SCR catalytic converter, 667 mm., Black			**68006**
Stralis I ES 440S48			**2004 ->**
F3BE0681E	353	480	
After / Before SCR catalytic converter, 667 mm., Black			**68006**
Stralis II AD190S31			**2012 ->**
F2BE3681C	228	310	
After / Before SCR catalytic converter, 667 mm., Black			**68006**
Stralis II AD190S31			**2012 ->**
F2CFE611D	228	310	
After / Before SCR catalytic converter, 667 mm., Black			**68006**
Stralis II AD190S31 MY16			**2016 ->**
F2CFE611D	228	310	
After / Before SCR catalytic converter, 667 mm., Black			**68006**
Stralis II AD190S31FP			**2012 ->**
F2BE3681C	228	310	
After / Before SCR catalytic converter, 667 mm., Black			**68006**
Stralis II AD190S31FP			**2012 ->**
F2CFE611D	228	310	
After / Before SCR catalytic converter, 667 mm., Black			**68006**
Stralis II AD190S31FP MY16			**2016 ->**
F2CFE611D	228	310	
After / Before SCR catalytic converter, 667 mm., Black			**68006**
Stralis II AD190S31P			**2012 ->**
F2BE3681C	228	310	
After / Before SCR catalytic converter, 667 mm., Black			**68006**
Stralis II AD190S31P			**2012 ->**
F2CFE611D	228	310	
After / Before SCR catalytic converter, 667 mm., Black			**68006**
Stralis II AD190S31P MY16			**2016 ->**
F2CFE611D	228	310	
After / Before SCR catalytic converter, 667 mm., Black			**68006**
Stralis II AD190S33			**2012 ->**
F2BE3681B	243	330	
After / Before SCR catalytic converter, 667 mm., Black			**68006**
Stralis II AD190S33			**2012 ->**
F2CFE611C	243	330	
After / Before SCR catalytic converter, 667 mm., Black			**68006**
Stralis II AD190S33 MY16			**2016 ->**
F2CFE611C	243	330	
After / Before SCR catalytic converter, 667 mm., Black			**68006**
Stralis II AD190S33FP			**2012 ->**
F2BE3681B	243	330	
After / Before SCR catalytic converter, 667 mm., Black			**68006**

IVECO Cont.			
Stralis II AD190S33FP			**2012 ->**
F2CFE611C	243	330	
After / Before SCR catalytic converter, 667 mm., Black			**68006**
Stralis II AD190S33FP MY16			**2016 ->**
F2CFE611C	243	330	
After / Before SCR catalytic converter, 667 mm., Black			**68006**
Stralis II AD190S33P			**2012 ->**
F2BE3681B	243	330	
After / Before SCR catalytic converter, 667 mm., Black			**68006**
Stralis II AD190S33P			**2012 ->**
F2CFE611C	243	330	
After / Before SCR catalytic converter, 667 mm., Black			**68006**
Stralis II AD190S33P CNG			**2012 ->**
F2BFA601D	243	330	
After / Before SCR catalytic converter, 667 mm., Black			**68006**
Stralis II AD190S33P MY16			**2016 ->**
F2CFE611C	243	330	
After / Before SCR catalytic converter, 667 mm., Black			**68006**
Stralis II AD190S36			**2012 ->**
F2BE3681A	265	360	
After / Before SCR catalytic converter, 667 mm., Black			**68006**
Stralis II AD190S36			**2012 ->**
F2CFE611B	265	360	
After / Before SCR catalytic converter, 667 mm., Black			**68006**
Stralis II AD190S36 MY16			**2016 ->**
F2CFE611B	265	360	
After / Before SCR catalytic converter, 667 mm., Black			**68006**
Stralis II AD190S36FP			**2012 ->**
F2BE3681A	265	360	
After / Before SCR catalytic converter, 667 mm., Black			**68006**
Stralis II AD190S36FP			**2012 ->**
F2CFE611B	265	360	
After / Before SCR catalytic converter, 667 mm., Black			**68006**
Stralis II AD190S36FP MY16			**2016 ->**
F2CFE611B	265	360	
After / Before SCR catalytic converter, 667 mm., Black			**68006**
Stralis II AD190S36P			**2012 ->**
F2BE3681A	265	360	
After / Before SCR catalytic converter, 667 mm., Black			**68006**
Stralis II AD190S36P			**2012 ->**
F2CFE611B	265	360	
After / Before SCR catalytic converter, 667 mm., Black			**68006**
Stralis II AD190S36P MY16			**2016 ->**
F2CFE611B	265	360	
After / Before SCR catalytic converter, 667 mm., Black			**68006**
Stralis II AD190S40 MY16			**2016 ->**
F2CFE611A	294	400	
After / Before SCR catalytic converter, 667 mm., Black			**68006**
Stralis II AD190S40FP			**2012 ->**
F2CFE611A	294	400	
After / Before SCR catalytic converter, 667 mm., Black			**68006**
Stralis II AD190S40FP MY16			**2016 ->**
F2CFE611A	294	400	
After / Before SCR catalytic converter, 667 mm., Black			**68006**
Stralis II AD190S40P			**2012 ->**
F2CFE611A	294	400	
After / Before SCR catalytic converter, 667 mm., Black			**68006**
Stralis II AD190S40P MY16			**2016 ->**
F2CFE611A	294	400	
After / Before SCR catalytic converter, 667 mm., Black			**68006**
Stralis II AD190S42			**2012 ->**
F3AE3681D	310	421	
After / Before SCR catalytic converter, 667 mm., Black			**68006**
Stralis II AD190S42 MY16			**2016 ->**
F3GFE611F	309	420	
After / Before SCR catalytic converter, 667 mm., Black			**68006**
Stralis II AD190S42FP			**2012 ->**
F3AE3681D	310	421	
After / Before SCR catalytic converter, 667 mm., Black			**68006**
Stralis II AD190S42FP			**2012 ->**
F3GFE611D	309	420	
After / Before SCR catalytic converter, 667 mm., Black			**68006**
Stralis II AD190S42FP MY16			**2016 ->**
F3GFE611F	309	420	
After / Before SCR catalytic converter, 667 mm., Black			**68006**
Stralis II AD190S42P			**2012 ->**
F3AE3681D	310	421	
After / Before SCR catalytic converter, 667 mm., Black			**68006**
Stralis II AD190S42P			**2012 ->**
F3GFE611D	309	420	
After / Before SCR catalytic converter, 667 mm., Black			**68006**
Stralis II AD190S42P MY16			**2016 ->**
F3GFE611F	309	420	
After / Before SCR catalytic converter, 667 mm., Black			**68006**

FAE

IVECO Cont.			
Stralis II AD190S46			**2012 ->**
F3AE3681Y	338	460	
After / Before SCR catalytic converter, 667 mm., Black			**68006**
Stralis II AD190S46FP			**2012 ->**
F3GFE611B	338	460	
After / Before SCR catalytic converter, 667 mm., Black			**68006**
Stralis II AD190S46FP			**2012 ->**
F3AE3681Y	338	460	
After / Before SCR catalytic converter, 667 mm., Black			**68006**
Stralis II AD190S46P			**2012 ->**
F3AE3681Y	338	460	
After / Before SCR catalytic converter, 667 mm., Black			**68006**
Stralis II AD190S46P			**2012 ->**
F3GFE611B	338	460	
After / Before SCR catalytic converter, 667 mm., Black			**68006**
Stralis II AD190S48 MY16			**2016 ->**
F3GFE611G	353	480	
After / Before SCR catalytic converter, 667 mm., Black			**68006**
Stralis II AD190S48FP			**2012 ->**
F3GFE611A	353	480	
After / Before SCR catalytic converter, 667 mm., Black			**68006**
Stralis II AD190S48P			**2012 ->**
F3GFE611A	353	480	
After / Before SCR catalytic converter, 667 mm., Black			**68006**
Stralis II AD190S48P MY16			**2016 ->**
F3GFE611G	353	480	
After / Before SCR catalytic converter, 667 mm., Black			**68006**
Stralis II AD190X31			**2017 ->**
F2CFE611D	228	310	
After / Before SCR catalytic converter, 667 mm., Black			**68006**
Stralis II AD190X31P			**2017 ->**
F2CFE611D	228	310	
After / Before SCR catalytic converter, 667 mm., Black			**68006**
Stralis II AD190X33			**2017 ->**
F2CFE611C	243	330	
After / Before SCR catalytic converter, 667 mm., Black			**68006**
Stralis II AD190X33P			**2017 ->**
F2CFE611C	243	330	
After / Before SCR catalytic converter, 667 mm., Black			**68006**
Stralis II AD190X36			**2017 ->**
F2CFE611B	265	360	
After / Before SCR catalytic converter, 667 mm., Black			**68006**
Stralis II AD190X36P			**2017 ->**
F2CFE611B	265	360	
After / Before SCR catalytic converter, 667 mm., Black			**68006**
Stralis II AD190X40			**2017 ->**
F2CFE611A	294	400	
After / Before SCR catalytic converter, 667 mm., Black			**68006**
Stralis II AD190X40P			**2017 ->**
F2CFE611A	294	400	
After / Before SCR catalytic converter, 667 mm., Black			**68006**
Stralis II AD260S31			**2012 ->**
F2BE3681C	228	310	
After / Before SCR catalytic converter, 667 mm., Black			**68006**
Stralis II AD260S31FP			**2012 ->**
F2BE3681C	228	310	
After / Before SCR catalytic converter, 667 mm., Black			**68006**
Stralis II AD260S31FP			**2012 ->**
F2CFE611D	228	310	
After / Before SCR catalytic converter, 667 mm., Black			**68006**
Stralis II AD260S31FP			**2012 ->**
F2CFE611D	228	310	
After / Before SCR catalytic converter, 667 mm., Black			**68006**
Stralis II AD260S31FP MY16			**2016 ->**
F2CFE611D	228	310	
After / Before SCR catalytic converter, 667 mm., Black			**68006**
Stralis II AD260S31FP MY16			**2016 ->**
F2CFE611D	228	310	
After / Before SCR catalytic converter, 667 mm., Black			**68006**
Stralis II AD260S31P			**2012 ->**
F2BE3681C	228	310	
After / Before SCR catalytic converter, 667 mm., Black			**68006**
Stralis II AD260S31P			**2012 ->**
F2BE3681C	228	310	
After / Before SCR catalytic converter, 667 mm., Black			**68006**
Stralis II AD260S31P			**2012 ->**
F2CFE611D	228	310	
After / Before SCR catalytic converter, 667 mm., Black			**68006**
Stralis II AD260S31P			**2012 ->**
F2CFE611D	228	310	
After / Before SCR catalytic converter, 667 mm., Black			**68006**
Stralis II AD260S31P MY16			**2016 ->**
F2CFE611D	228	310	
After / Before SCR catalytic converter, 667 mm., Black			**68006**

IVECO Cont.			
Stralis II AD260S33			**2012 ->**
F2BE3681B	243	330	
After / Before SCR catalytic converter, 667 mm., Black			**68006**
Stralis II AD260S33FP			**2012 ->**
F2BE3681B	243	330	
After / Before SCR catalytic converter, 667 mm., Black			**68006**
Stralis II AD260S33FP			**2012 ->**
F2CFE611C	243	330	
After / Before SCR catalytic converter, 667 mm., Black			**68006**
Stralis II AD260S33FP CNG			**2012 ->**
F2BFA601D	243	330	
After / Before SCR catalytic converter, 667 mm., Black			**68006**
Stralis II AD260S33FP MY16			**2016 ->**
F2CFE611C	243	330	
After / Before SCR catalytic converter, 667 mm., Black			**68006**
Stralis II AD260S33FP MY16			**2016 ->**
F2CFE611C	243	330	
After / Before SCR catalytic converter, 667 mm., Black			**68006**
Stralis II AD260S33P			**2012 ->**
F2BE3681B	243	330	
After / Before SCR catalytic converter, 667 mm., Black			**68006**
Stralis II AD260S33P			**2012 ->**
F2BE3681B	243	330	
After / Before SCR catalytic converter, 667 mm., Black			**68006**
Stralis II AD260S33P			**2012 ->**
F2CFE611C	243	330	
After / Before SCR catalytic converter, 667 mm., Black			**68006**
Stralis II AD260S33P			**2012 ->**
F2CFE611C	243	330	
After / Before SCR catalytic converter, 667 mm., Black			**68006**
Stralis II AD260S33P CNG			**2012 ->**
F2BFA601D	243	330	
After / Before SCR catalytic converter, 667 mm., Black			**68006**
Stralis II AD260S33P MY16			**2016 ->**
F2CFE611C	243	330	
After / Before SCR catalytic converter, 667 mm., Black			**68006**
Stralis II AD260S33P MY16			**2016 ->**
F2CFE611C	243	330	
After / Before SCR catalytic converter, 667 mm., Black			**68006**
Stralis II AD260S36			**2012 ->**
F2BE3681A	265	360	
After / Before SCR catalytic converter, 667 mm., Black			**68006**
Stralis II AD260S36FP			**2012 ->**
F2BE3681A	265	360	
After / Before SCR catalytic converter, 667 mm., Black			**68006**
Stralis II AD260S36FP			**2012 ->**
F2CFE611B	265	360	
After / Before SCR catalytic converter, 667 mm., Black			**68006**
Stralis II AD260S36FP MY16			**2016 ->**
F2CFE611B	265	360	
After / Before SCR catalytic converter, 667 mm., Black			**68006**
Stralis II AD260S36FP MY16			**2016 ->**
F2CFE611B	265	360	
After / Before SCR catalytic converter, 667 mm., Black			**68006**
Stralis II AD260S36P			**2012 ->**
F2BE3681A	265	360	
After / Before SCR catalytic converter, 667 mm., Black			**68006**
Stralis II AD260S36P			**2012 ->**
F2BE3681A	265	360	
After / Before SCR catalytic converter, 667 mm., Black			**68006**
Stralis II AD260S36P			**2012 ->**
F2CFE611B	265	360	
After / Before SCR catalytic converter, 667 mm., Black			**68006**
Stralis II AD260S36P			**2012 ->**
F2CFE611B	265	360	
After / Before SCR catalytic converter, 667 mm., Black			**68006**
Stralis II AD260S36P MY16			**2016 ->**
F2CFE611B	265	360	
After / Before SCR catalytic converter, 667 mm., Black			**68006**
Stralis II AD260S36P MY16			**2016 ->**
F2CFE611B	265	360	
After / Before SCR catalytic converter, 667 mm., Black			**68006**
Stralis II AD260S40FP			**2012 ->**
F2CFE611A	294	400	
After / Before SCR catalytic converter, 667 mm., Black			**68006**
Stralis II AD260S40FP			**2012 ->**
F2CFE611A	294	400	
After / Before SCR catalytic converter, 667 mm., Black			**68006**
Stralis II AD260S40FP MY16			**2016 ->**
F2CFE611A	294	400	
After / Before SCR catalytic converter, 667 mm., Black			**68006**
Stralis II AD260S40P			**2012 ->**
F2CFE611A	294	400	
After / Before SCR catalytic converter, 667 mm., Black			**68006**

IVECO Cont.			
Stralis II AD260S40P			**2012 ->**
F2CFE611A	294	400	
After / Before SCR catalytic converter, 667 mm., Black			**68006**
Stralis II AD260S40P MY16			**2016 ->**
F2CFE611A	294	400	
After / Before SCR catalytic converter, 667 mm., Black			**68006**
Stralis II AD260S40P MY16			**2016 ->**
F2CFE611A	294	400	
After / Before SCR catalytic converter, 667 mm., Black			**68006**
Stralis II AD260S42			**2012 ->**
F3AE3681D	310	421	
After / Before SCR catalytic converter, 667 mm., Black			**68006**
Stralis II AD260S42FP			**2012 ->**
F3AE3681D	310	421	
After / Before SCR catalytic converter, 667 mm., Black			**68006**
Stralis II AD260S42FP			**2012 ->**
F3GFE611D	309	420	
After / Before SCR catalytic converter, 667 mm., Black			**68006**
Stralis II AD260S42FP			**2012 ->**
F3GFE611D	309	420	
After / Before SCR catalytic converter, 667 mm., Black			**68006**
Stralis II AD260S42FP			**2012 ->**
F3AE3681D	310	421	
After / Before SCR catalytic converter, 667 mm., Black			**68006**
Stralis II AD260S42FP MY16			**2016 ->**
F3GFE611F	309	420	
After / Before SCR catalytic converter, 667 mm., Black			**68006**
Stralis II AD260S42FP MY16			**2016 ->**
F3GFE611F	309	420	
After / Before SCR catalytic converter, 667 mm., Black			**68006**
Stralis II AD260S42P			**2012 ->**
F3AE3681D	310	421	
After / Before SCR catalytic converter, 667 mm., Black			**68006**
Stralis II AD260S42P			**2012 ->**
F3AE3681D	310	421	
After / Before SCR catalytic converter, 667 mm., Black			**68006**
Stralis II AD260S42P			**2012 ->**
F3GFE611D	309	420	
After / Before SCR catalytic converter, 667 mm., Black			**68006**
Stralis II AD260S42P			**2012 ->**
F3GFE611D	309	420	
After / Before SCR catalytic converter, 667 mm., Black			**68006**
Stralis II AD260S42P MY16			**2016 ->**
F3GFE611F	309	420	
After / Before SCR catalytic converter, 667 mm., Black			**68006**
Stralis II AD260S42P MY16			**2016 ->**
F3GFE611F	309	420	
After / Before SCR catalytic converter, 667 mm., Black			**68006**
Stralis II AD260S46FP			**2012 ->**
F3AE3681Y	338	460	
After / Before SCR catalytic converter, 667 mm., Black			**68006**
Stralis II AD260S46FP			**2012 ->**
F3GFE611B	338	460	
After / Before SCR catalytic converter, 667 mm., Black			**68006**
Stralis II AD260S46FP			**2012 ->**
F3GFE611B	338	460	
After / Before SCR catalytic converter, 667 mm., Black			**68006**
Stralis II AD260S46FP CNG MY16			**2016 ->**
F3HFE601A	338	460	
After / Before SCR catalytic converter, 667 mm., Black			**68006**
Stralis II AD260S46FP CNG+LNG MY16			**2016 ->**
F3HFE601A	338	460	
After / Before SCR catalytic converter, 667 mm., Black			**68006**
Stralis II AD260S46FP LNG MY16			**2016 ->**
F3HFE601A	338	460	
After / Before SCR catalytic converter, 667 mm., Black			**68006**
Stralis II AD260S46FP MY16			**2016 ->**
F3GFE611E	338	460	
After / Before SCR catalytic converter, 667 mm., Black			**68006**
Stralis II AD260S46FP MY16			**2016 ->**
F3GFE611E	338	460	
After / Before SCR catalytic converter, 667 mm., Black			**68006**
Stralis II AD260S46P			**2012 ->**
F3AE3681Y	338	460	
After / Before SCR catalytic converter, 667 mm., Black			**68006**
Stralis II AD260S46P			**2012 ->**
F3AE3681Y	338	460	
After / Before SCR catalytic converter, 667 mm., Black			**68006**
Stralis II AD260S46P			**2012 ->**
F3GFE611B	338	460	
After / Before SCR catalytic converter, 667 mm., Black			**68006**
Stralis II AD260S46P			**2012 ->**
F3GFE611B	338	460	
After / Before SCR catalytic converter, 667 mm., Black			**68006**

IVECO Cont.

Stralis II AD260S46P CNG MY16			**2016 ->**
F3HFE601A	338	460	
After / Before SCR catalytic converter, 667 mm., Black			**68006**
Stralis II AD260S46P CNG+LNG MY16			**2016 ->**
F3HFE601A	338	460	
After / Before SCR catalytic converter, 667 mm., Black			**68006**
Stralis II AD260S46P LNG MY16			**2016 ->**
F3HFE601A	338	460	
After / Before SCR catalytic converter, 667 mm., Black			**68006**
Stralis II AD260S46P MY16			**2016 ->**
F3GFE611E	338	460	
After / Before SCR catalytic converter, 667 mm., Black			**68006**
Stralis II AD260S46P MY16			**2016 ->**
F3GFE611E	338	460	
After / Before SCR catalytic converter, 667 mm., Black			**68006**
Stralis II AD260S48FP			**2012 ->**
F3GFE611A	353	480	
After / Before SCR catalytic converter, 667 mm., Black			**68006**
Stralis II AD260S48FP			**2012 ->**
F3BE3681H	353	480	
After / Before SCR catalytic converter, 667 mm., Black			**68006**
Stralis II AD260S48FP MY16			**2016 ->**
F3GFE611G	353	480	
After / Before SCR catalytic converter, 667 mm., Black			**68006**
Stralis II AD260S48FP MY16			**2016 ->**
F3GFE611G	353	480	
After / Before SCR catalytic converter, 667 mm., Black			**68006**
Stralis II AD260S48P			**2012 ->**
F3GFE611A	353	480	
After / Before SCR catalytic converter, 667 mm., Black			**68006**
Stralis II AD260S48P			**2012 ->**
F3BE3681H	353	480	
After / Before SCR catalytic converter, 667 mm., Black			**68006**
Stralis II AD260S48P MY16			**2016 ->**
F3GFE611G	353	480	
After / Before SCR catalytic converter, 667 mm., Black			**68006**
Stralis II AD260S48P MY16			**2016 ->**
F3GFE611G	353	480	
After / Before SCR catalytic converter, 667 mm., Black			**68006**
Stralis II AD260X31			**2017 ->**
F2CFE611D	228	310	
After / Before SCR catalytic converter, 667 mm., Black			**68006**
Stralis II AD260X36			**2017 ->**
F2CFE611B	265	360	
After / Before SCR catalytic converter, 667 mm., Black			**68006**
Stralis II AD260X36P			**2017 ->**
F2CFE611B	265	360	
After / Before SCR catalytic converter, 667 mm., Black			**68006**
Stralis II AD260X36P			**2017 ->**
F2CFE611B	265	360	
After / Before SCR catalytic converter, 667 mm., Black			**68006**
Stralis II AD260X40			**2017 ->**
F2CFE611A	294	400	
After / Before SCR catalytic converter, 667 mm., Black			**68006**
Stralis II AD260X40P			**2017 ->**
F2CFE611A	294	400	
After / Before SCR catalytic converter, 667 mm., Black			**68006**
Stralis II AD260X40P			**2017 ->**
F2CFE611A	294	400	
After / Before SCR catalytic converter, 667 mm., Black			**68006**
Stralis II AD260X42			**2017 ->**
F3GFE611F	309	420	
After / Before SCR catalytic converter, 667 mm., Black			**68006**
Stralis II AD260X42P			**2017 ->**
F3GFE611F	309	420	
After / Before SCR catalytic converter, 667 mm., Black			**68006**
Stralis II AD260X42P			**2017 ->**
F3GFE611F	309	420	
After / Before SCR catalytic converter, 667 mm., Black			**68006**
Stralis II AD260X46			**2017 ->**
F3GFE611E	338	460	
After / Before SCR catalytic converter, 667 mm., Black			**68006**
Stralis II AD260X46P			**2017 ->**
F3GFE611E	338	460	
After / Before SCR catalytic converter, 667 mm., Black			**68006**
Stralis II AD260X46P			**2017 ->**
F3GFE611E	338	460	
After / Before SCR catalytic converter, 667 mm., Black			**68006**
Stralis II AD260X48			**2017 ->**
F3GFE611G	353	480	
After / Before SCR catalytic converter, 667 mm., Black			**68006**
Stralis II AD260X48P			**2017 ->**
F3GFE611G	353	480	
After / Before SCR catalytic converter, 667 mm., Black			**68006**

IVECO Cont.

Stralis II AD260X48P			**2017 ->**
F3GFE611G	353	480	
After / Before SCR catalytic converter, 667 mm., Black			**68006**
Stralis II AD320S42P			**2012 ->**
F3AE3681D	310	421	
After / Before SCR catalytic converter, 667 mm., Black			**68006**
Stralis II AD320S42P			**2012 ->**
F3GFE611D	309	420	
After / Before SCR catalytic converter, 667 mm., Black			**68006**
Stralis II AD320S42P MY16			**2016 ->**
F3GFE611F	309	420	
After / Before SCR catalytic converter, 667 mm., Black			**68006**
Stralis II AD320X36P			**2017 ->**
F2CFE611B	265	360	
After / Before SCR catalytic converter, 667 mm., Black			**68006**
Stralis II AD320X40P			**2017 ->**
F2CFE611A	294	400	
After / Before SCR catalytic converter, 667 mm., Black			**68006**
Stralis II AD320X42P			**2017 ->**
F3GFE611F	309	420	
After / Before SCR catalytic converter, 667 mm., Black			**68006**
Stralis II AD320X46P			**2017 ->**
F3GFE611E	338	460	
After / Before SCR catalytic converter, 667 mm., Black			**68006**
Stralis II AD320X48P			**2017 ->**
F3GFE611G	353	480	
After / Before SCR catalytic converter, 667 mm., Black			**68006**
Stralis II AD340X36			**2017 ->**
F2CFE611B	265	360	
After / Before SCR catalytic converter, 667 mm., Black			**68006**
Stralis II AD340X36P			**2017 ->**
F2CFE611B	265	360	
After / Before SCR catalytic converter, 667 mm., Black			**68006**
Stralis II AD340X40			**2017 ->**
F2CFE611A	294	400	
After / Before SCR catalytic converter, 667 mm., Black			**68006**
Stralis II AD340X40P			**2017 ->**
F2CFE611A	294	400	
After / Before SCR catalytic converter, 667 mm., Black			**68006**
Stralis II AD340X42			**2017 ->**
F3GFE611F	309	420	
After / Before SCR catalytic converter, 667 mm., Black			**68006**
Stralis II AD340X42P			**2017 ->**
F3GFE611F	309	420	
After / Before SCR catalytic converter, 667 mm., Black			**68006**
Stralis II AD340X46			**2017 ->**
F3GFE611E	338	460	
After / Before SCR catalytic converter, 667 mm., Black			**68006**
Stralis II AD340X46P			**2017 ->**
F3GFE611E	338	460	
After / Before SCR catalytic converter, 667 mm., Black			**68006**
Stralis II AD340X48			**2017 ->**
F3GFE611G	353	480	
After / Before SCR catalytic converter, 667 mm., Black			**68006**
Stralis II AD340X48P			**2017 ->**
F3GFE611G	353	480	
After / Before SCR catalytic converter, 667 mm., Black			**68006**
Stralis II AD440S33TP			**2012 ->**
F2CFE611C	243	330	
After / Before SCR catalytic converter, 667 mm., Black			**68006**
Stralis II AD440S33TP			**2012 ->**
F2BE3681B	243	330	
After / Before SCR catalytic converter, 667 mm., Black			**68006**
Stralis II AD440S33TP CNG			**2012 ->**
F2BFA601D	243	330	
After / Before SCR catalytic converter, 667 mm., Black			**68006**
Stralis II AD440S33TP MY16			**2016 ->**
F2CFE611C	243	330	
After / Before SCR catalytic converter, 667 mm., Black			**68006**
Stralis II AD440S36TP			**2012 ->**
F2BE3681A	265	360	
After / Before SCR catalytic converter, 667 mm., Black			**68006**
Stralis II AD440S36TP			**2012 ->**
F2CFE611B	265	360	
After / Before SCR catalytic converter, 667 mm., Black			**68006**
Stralis II AD440S36TP MY16			**2016 ->**
F2CFE611B	265	360	
After / Before SCR catalytic converter, 667 mm., Black			**68006**
Stralis II AD440S40TP			**2012 ->**
F2CFE611A	294	400	
After / Before SCR catalytic converter, 667 mm., Black			**68006**
Stralis II AD440S40TP MY16			**2016 ->**
F2CFE611A	294	400	
After / Before SCR catalytic converter, 667 mm., Black			**68006**

IVECO Cont.

Stralis II AD440S42TP			**2012 ->**
F3AE3681D	310	421	
After / Before SCR catalytic converter, 667 mm., Black			**68006**
Stralis II AD440S42TP			**2012 ->**
F3GFE611D	309	420	
After / Before SCR catalytic converter, 667 mm., Black			**68006**
Stralis II AD440S42TP MY16			**2016 ->**
F3GFE611F	309	420	
After / Before SCR catalytic converter, 667 mm., Black			**68006**
Stralis II AD440S46TP			**2012 ->**
F3AE3681Y	338	460	
After / Before SCR catalytic converter, 667 mm., Black			**68006**
Stralis II AD440S46TP			**2012 ->**
F3GFE611B	338	460	
After / Before SCR catalytic converter, 667 mm., Black			**68006**
Stralis II AD440S46TP MY16			**2016 ->**
F3GFE611E	338	460	
After / Before SCR catalytic converter, 667 mm., Black			**68006**
Stralis II AD440S48TP			**2012 ->**
F3GFE611A	353	480	
After / Before SCR catalytic converter, 667 mm., Black			**68006**
Stralis II AD440S48TP			**2012 ->**
F3BE3681H	353	480	
After / Before SCR catalytic converter, 667 mm., Black			**68006**
Stralis II AD440S48TP MY16			**2016 ->**
F3GFE611G	353	480	
After / Before SCR catalytic converter, 667 mm., Black			**68006**
Stralis II AD440X42T			**2017 ->**
F3GFE611F	309	420	
After / Before SCR catalytic converter, 667 mm., Black			**68006**
Stralis II AD440X42TP			**2017 ->**
F3GFE611F	309	420	
After / Before SCR catalytic converter, 667 mm., Black			**68006**
Stralis II AD440X46TP			**2017 ->**
F3GFE611E	338	460	
After / Before SCR catalytic converter, 667 mm., Black			**68006**
Stralis II AD440X48T			**2017 ->**
F3GFE611G	353	480	
After / Before SCR catalytic converter, 667 mm., Black			**68006**
Stralis II AD440X48TP			**2017 ->**
F3GFE611G	353	480	
After / Before SCR catalytic converter, 667 mm., Black			**68006**
Stralis II AS190S42FP			**2012 ->**
F3AE3681D	310	421	
After / Before SCR catalytic converter, 667 mm., Black			**68006**
Stralis II AS190S42FP			**2012 ->**
F3GFE611D	309	420	
After / Before SCR catalytic converter, 667 mm., Black			**68006**
Stralis II AS190S42FP MY16			**2016 ->**
F3GFE611F, F3GFL611F	309	420	
After / Before SCR catalytic converter, 667 mm., Black			**68006**
Stralis II AS190S42P			**2012 ->**
F3AE3681D	310	421	
After / Before SCR catalytic converter, 667 mm., Black			**68006**
Stralis II AS190S42P			**2012 ->**
F3GFE611D	309	420	
After / Before SCR catalytic converter, 667 mm., Black			**68006**
Stralis II AS190S42P MY16			**2016 ->**
F3GFE611F, F3GFL611F	309	420	
After / Before SCR catalytic converter, 667 mm., Black			**68006**
Stralis II AS190S46FP			**2012 ->**
F3AE3681Y	338	460	
After / Before SCR catalytic converter, 667 mm., Black			**68006**
Stralis II AS190S46FP			**2012 ->**
F3GFE611B	338	460	
After / Before SCR catalytic converter, 667 mm., Black			**68006**
Stralis II AS190S46FP CNG MY16			**2016 ->**
F3HFE601A	338	460	
After / Before SCR catalytic converter, 667 mm., Black			**68006**
Stralis II AS190S46FP CNG+LNG MY16			**2016 ->**
F3HFE601A	338	460	
After / Before SCR catalytic converter, 667 mm., Black			**68006**
Stralis II AS190S46FP LNG MY16			**2016 ->**
F3HFE601A	338	460	
After / Before SCR catalytic converter, 667 mm., Black			**68006**
Stralis II AS190S46FP MY16			**2016 ->**
F3GFE611E, F3GFL611E	338	460	
After / Before SCR catalytic converter, 667 mm., Black			**68006**
Stralis II AS190S46P			**2012 ->**
F3AE3681Y	338	460	
After / Before SCR catalytic converter, 667 mm., Black			**68006**
Stralis II AS190S46P			**2012 ->**
F3GFE611B	338	460	
After / Before SCR catalytic converter, 667 mm., Black			**68006**

IVECO Cont.

Stralis II AS190S46P MY16			**2016 ->**
F3GFE611E, F3GFL611E	338	460	
After / Before SCR catalytic converter, 667 mm., Black			**68006**
Stralis II AS190S48FP			**2012 ->**
F3GFE611A	353	480	
After / Before SCR catalytic converter, 667 mm., Black			**68006**
Stralis II AS190S48FP MY16			**2016 ->**
F3GFE611G, F3GFL611G	353	480	
After / Before SCR catalytic converter, 667 mm., Black			**68006**
Stralis II AS190S48P			**2012 ->**
F3GFE611A	353	480	
After / Before SCR catalytic converter, 667 mm., Black			**68006**
Stralis II AS190S48P MY16			**2016 ->**
F3GFE611G, F3GFL611G	353	480	
After / Before SCR catalytic converter, 667 mm., Black			**68006**
Stralis II AS190S50FP			**2012 ->**
F3BE3681B, F3HFE611B	368	500	
After / Before SCR catalytic converter, 667 mm., Black			**68006**
Stralis II AS190S50P			**2012 ->**
F3BE3681B, F3HFE611B	368	500	
After / Before SCR catalytic converter, 667 mm., Black			**68006**
Stralis II AS260S42FP			**2012 ->**
F3AE3681D	310	421	
After / Before SCR catalytic converter, 667 mm., Black			**68006**
Stralis II AS260S42FP			**2012 ->**
F3AE3681D	310	421	
After / Before SCR catalytic converter, 667 mm., Black			**68006**
Stralis II AS260S42FP			**2012 ->**
F3GFE611D	309	420	
After / Before SCR catalytic converter, 667 mm., Black			**68006**
Stralis II AS260S42FP			**2012 ->**
F3GFE611D	309	420	
After / Before SCR catalytic converter, 667 mm., Black			**68006**
Stralis II AS260S42FP MY16			**2016 ->**
F3GFE611F, F3GFL611F	309	420	
After / Before SCR catalytic converter, 667 mm., Black			**68006**
Stralis II AS260S42FP MY16			**2016 ->**
F3GFE611F, F3GFL611F	309	420	
After / Before SCR catalytic converter, 667 mm., Black			**68006**
Stralis II AS260S42P			**2012 ->**
F3AE3681D	310	421	
After / Before SCR catalytic converter, 667 mm., Black			**68006**
Stralis II AS260S42P			**2012 ->**
F3AE3681D	310	421	
After / Before SCR catalytic converter, 667 mm., Black			**68006**
Stralis II AS260S42P			**2012 ->**
F3GFE611D	309	420	
After / Before SCR catalytic converter, 667 mm., Black			**68006**
Stralis II AS260S42P MY16			**2016 ->**
F3GFE611F, F3GFL611F	309	420	
After / Before SCR catalytic converter, 667 mm., Black			**68006**
Stralis II AS260S42P MY16			**2016 ->**
F3GFE611F, F3GFL611F	309	420	
After / Before SCR catalytic converter, 667 mm., Black			**68006**
Stralis II AS260S46FP			**2012 ->**
F3AE3681Y	338	460	
After / Before SCR catalytic converter, 667 mm., Black			**68006**
Stralis II AS260S46FP			**2012 ->**
F3AE3681Y	338	460	
After / Before SCR catalytic converter, 667 mm., Black			**68006**
Stralis II AS260S46FP			**2012 ->**
F3GFE611B	338	460	
After / Before SCR catalytic converter, 667 mm., Black			**68006**
Stralis II AS260S46FP MY16			**2016 ->**
F3GFE611E, F3GFL611E	338	460	
After / Before SCR catalytic converter, 667 mm., Black			**68006**
Stralis II AS260S46FP MY16			**2016 ->**
F3GFE611E, F3GFL611E	338	460	
After / Before SCR catalytic converter, 667 mm., Black			**68006**
Stralis II AS260S46P			**2012 ->**
F3AE3681Y	338	460	
After / Before SCR catalytic converter, 667 mm., Black			**68006**
Stralis II AS260S46P			**2012 ->**
F3AE3681Y	338	460	
After / Before SCR catalytic converter, 667 mm., Black			**68006**
Stralis II AS260S46P			**2012 ->**
F3GFE611B	338	460	
After / Before SCR catalytic converter, 667 mm., Black			**68006**
Stralis II AS260S46P MY16			**2016 ->**
F3GFE611E, F3GFL611E	338	460	
After / Before SCR catalytic converter, 667 mm., Black			**68006**
Stralis II AS260S46P MY16			**2016 ->**
F3GFE611E, F3GFL611E	338	460	
After / Before SCR catalytic converter, 667 mm., Black			**68006**

IVECO Cont.			
Stralis II AS260S48FP			**2012 ->**
F3GFE611A	353	480	
After / Before SCR catalytic converter, 667 mm., Black			**68006**
Stralis II AS260S48FP			**2012 ->**
F3GFE611A	353	480	
After / Before SCR catalytic converter, 667 mm., Black			**68006**
Stralis II AS260S48FP MY16			**2016 ->**
F3GFE611G, F3GFL611G	353	480	
After / Before SCR catalytic converter, 667 mm., Black			**68006**
Stralis II AS260S48FP MY16			**2016 ->**
F3GFE611G, F3GFL611G	353	480	
After / Before SCR catalytic converter, 667 mm., Black			**68006**
Stralis II AS260S48P			**2012 ->**
F3GFE611A	353	480	
After / Before SCR catalytic converter, 667 mm., Black			**68006**
Stralis II AS260S48P MY16			**2016 ->**
F3GFE611G, F3GFL611G	353	480	
After / Before SCR catalytic converter, 667 mm., Black			**68006**
Stralis II AS260S48P MY16			**2016 ->**
F3GFE611G, F3GFL611G	353	480	
After / Before SCR catalytic converter, 667 mm., Black			**68006**
Stralis II AS260S50FP			**2012 ->**
F3BE3681B, F3HFE611B	368	500	
After / Before SCR catalytic converter, 667 mm., Black			**68006**
Stralis II AS260S50FP			**2012 ->**
F3BE3681B, F3HFE611B	368	500	
After / Before SCR catalytic converter, 667 mm., Black			**68006**
Stralis II AS260S50P			**2012 ->**
F3BE3681B, F3HFE611B	368	500	
After / Before SCR catalytic converter, 667 mm., Black			**68006**
Stralis II AS260S50P			**2012 ->**
F3BE3681B, F3HFE611B	368	500	
After / Before SCR catalytic converter, 667 mm., Black			**68006**
Stralis II AS260S50P			**2012 ->**
F3BE3681B, F3HFE611B	368	500	
After / Before SCR catalytic converter, 667 mm., Black			**68006**
Stralis II AS260S56FP			**2012 ->**
F3BE3681A, F3HFE611A	412	560	
After / Before SCR catalytic converter, 667 mm., Black			**68006**
Stralis II AS260S56FP			**2012 ->**
F3HFE611A	412	560	
After / Before SCR catalytic converter, 667 mm., Black			**68006**
Stralis II AS260S56P			**2012 ->**
F3BE3681A, F3HFE611A	412	560	
After / Before SCR catalytic converter, 667 mm., Black			**68006**
Stralis II AS260S56P			**2012 ->**
F3BE3681A, F3HFE611A	412	560	
After / Before SCR catalytic converter, 667 mm., Black			**68006**
Stralis II AS260S56P			**2012 ->**
F3HFE611A	412	560	
After / Before SCR catalytic converter, 667 mm., Black			**68006**
Stralis II AS260X42P			**2017 ->**
F3GFE611F	309	420	
After / Before SCR catalytic converter, 667 mm., Black			**68006**
Stralis II AS260X46P			**2017 ->**
F3GFE611E	338	460	
After / Before SCR catalytic converter, 667 mm., Black			**68006**
Stralis II AS260X48P			**2017 ->**
F3GFE611G	353	480	
After / Before SCR catalytic converter, 667 mm., Black			**68006**
Stralis II AS260X51			**2017 ->**
F3HFE611G	375	510	
After / Before SCR catalytic converter, 667 mm., Black			**68006**
Stralis II AS260X51P			**2017 ->**
F3HFE611G	375	510	
After / Before SCR catalytic converter, 667 mm., Black			**68006**
Stralis II AS260X51P			**2017 ->**
F3HFE611G	375	510	
After / Before SCR catalytic converter, 667 mm., Black			**68006**
Stralis II AS260X57			**2017 ->**
F3HFE611F	420	571	
After / Before SCR catalytic converter, 667 mm., Black			**68006**
Stralis II AS260X57P			**2017 ->**
F3HFE611F	420	571	
After / Before SCR catalytic converter, 667 mm., Black			**68006**
Stralis II AS260X57P			**2017 ->**
F3HFE611F	420	571	
After / Before SCR catalytic converter, 667 mm., Black			**68006**
Stralis II AS320S50P			**2012 ->**
F3BE3681B, F3HFE611B	368	500	
After / Before SCR catalytic converter, 667 mm., Black			**68006**
Stralis II AS320X51P			**2017 ->**
F3HFE611G	375	510	
After / Before SCR catalytic converter, 667 mm., Black			**68006**

FAE

IVECO Cont.			
Stralis II AS320X57P			**2017 ->**
F3HFE611F	420	571	
After / Before SCR catalytic converter, 667 mm., Black			**68006**
Stralis II AS340X51			**2017 ->**
F3HFE611G	375	510	
After / Before SCR catalytic converter, 667 mm., Black			**68006**
Stralis II AS340X51P			**2017 ->**
F3HFE611G	375	510	
After / Before SCR catalytic converter, 667 mm., Black			**68006**
Stralis II AS340X57			**2017 ->**
F3HFE611F	420	571	
After / Before SCR catalytic converter, 667 mm., Black			**68006**
Stralis II AS340X57P			**2017 ->**
F3HFE611F	420	571	
After / Before SCR catalytic converter, 667 mm., Black			**68006**
Stralis II AS440S42TFP			**2012 ->**
F3AE3681D	310	421	
After / Before SCR catalytic converter, 667 mm., Black			**68006**
Stralis II AS440S42TFP			**2012 ->**
F3GFE611D	309	420	
After / Before SCR catalytic converter, 667 mm., Black			**68006**
Stralis II AS440S42TFP MY16			**2016 ->**
F3GFE611F, F3GFL611F	309	420	
After / Before SCR catalytic converter, 667 mm., Black			**68006**
Stralis II AS440S42TP			**2012 ->**
F3AE3681D	310	421	
After / Before SCR catalytic converter, 667 mm., Black			**68006**
Stralis II AS440S42TP			**2012 ->**
F3AE3681D	310	421	
After / Before SCR catalytic converter, 667 mm., Black			**68006**
Stralis II AS440S42TP			**2012 ->**
F3GFE611D	309	420	
After / Before SCR catalytic converter, 667 mm., Black			**68006**
Stralis II AS440S42TP			**2012 ->**
F3GFE611D	309	420	
After / Before SCR catalytic converter, 667 mm., Black			**68006**
Stralis II AS440S42TP			**2012 ->**
F3AE3681D	310	421	
After / Before SCR catalytic converter, 667 mm., Black			**68006**
Stralis II AS440S42TP			**2012 ->**
F3GFE611D	309	420	
After / Before SCR catalytic converter, 667 mm., Black			**68006**
Stralis II AS440S42TP MY16			**2016 ->**
F3GFE611F, F3GFL611F	309	420	
After / Before SCR catalytic converter, 667 mm., Black			**68006**
Stralis II AS440S42TP MY16			**2016 ->**
F3GFE611F, F3GFL611F	309	420	
After / Before SCR catalytic converter, 667 mm., Black			**68006**
Stralis II AS440S46TFP			**2012 ->**
F3AE3681Y	338	460	
After / Before SCR catalytic converter, 667 mm., Black			**68006**
Stralis II AS440S46TFP			**2012 ->**
F3GFE611B	338	460	
After / Before SCR catalytic converter, 667 mm., Black			**68006**
Stralis II AS440S46TFP MY16			**2016 ->**
F3GFE611E, F3GFL611E	338	460	
After / Before SCR catalytic converter, 667 mm., Black			**68006**
Stralis II AS440S46TP			**2012 ->**
F3AE3681Y	338	460	
After / Before SCR catalytic converter, 667 mm., Black			**68006**
Stralis II AS440S46TP			**2012 ->**
F3AE3681Y	338	460	
After / Before SCR catalytic converter, 667 mm., Black			**68006**
Stralis II AS440S46TP			**2012 ->**
F3GFE611B	338	460	
After / Before SCR catalytic converter, 667 mm., Black			**68006**
Stralis II AS440S46TP			**2012 ->**
F3GFE611B	338	460	
After / Before SCR catalytic converter, 667 mm., Black			**68006**
Stralis II AS440S46TP			**2012 ->**
F3GFE611B	338	460	
After / Before SCR catalytic converter, 667 mm., Black			**68006**
Stralis II AS440S46TP			**2012 ->**
F3AE3681Y	338	460	
After / Before SCR catalytic converter, 667 mm., Black			**68006**
Stralis II AS440S46TP CNG MY16			**2016 ->**
F3HFE601A	338	460	
After / Before SCR catalytic converter, 667 mm., Black			**68006**
Stralis II AS440S46TP CNG MY16			**2016 ->**
F3HFE601A	338	460	
After / Before SCR catalytic converter, 667 mm., Black			**68006**
Stralis II AS440S46TP CNG+LNG MY16			**2016 ->**
F3HFE601A	338	460	
After / Before SCR catalytic converter, 667 mm., Black			**68006**

IVECO Cont.

Stralis II AS440S46TP CNG+LNG MY16			**2016 ->**
F3HFE601A	338	460	
After / Before SCR catalytic converter, 667 mm., Black			**68006**
Stralis II AS440S46TP LNG MY16			**2016 ->**
F3HFE601A	338	460	
After / Before SCR catalytic converter, 667 mm., Black			**68006**
Stralis II AS440S46TP LNG MY16			**2016 ->**
F3HFE601A	338	460	
After / Before SCR catalytic converter, 667 mm., Black			**68006**
Stralis II AS440S46TP MY16			**2016 ->**
F3GFE611E, F3GFL611E	338	460	
After / Before SCR catalytic converter, 667 mm., Black			**68006**
Stralis II AS440S46TP MY16			**2016 ->**
F3GFE611E	338	460	
After / Before SCR catalytic converter, 667 mm., Black			**68006**
Stralis II AS440S46TP MY16			**2016 ->**
F3GFE611E, F3GFL611E	338	460	
After / Before SCR catalytic converter, 667 mm., Black			**68006**
Stralis II AS440S48TFP			**2012 ->**
F3GFE611A	353	480	
After / Before SCR catalytic converter, 667 mm., Black			**68006**
Stralis II AS440S48TFP MY16			**2016 ->**
F3GFE611G, F3GFL611G	353	480	
After / Before SCR catalytic converter, 667 mm., Black			**68006**
Stralis II AS440S48TP			**2012 ->**
F3GFE611A	353	480	
After / Before SCR catalytic converter, 667 mm., Black			**68006**
Stralis II AS440S48TP			**2012 ->**
F3GFE611A	353	480	
After / Before SCR catalytic converter, 667 mm., Black			**68006**
Stralis II AS440S48TP			**2012 ->**
F3GFE611A	353	480	
After / Before SCR catalytic converter, 667 mm., Black			**68006**
Stralis II AS440S48TP MY16			**2016 ->**
F3GFE611G, F3GFL611G	353	480	
After / Before SCR catalytic converter, 667 mm., Black			**68006**
Stralis II AS440S48TP MY16			**2016 ->**
F3GFE611G	353	480	
After / Before SCR catalytic converter, 667 mm., Black			**68006**
Stralis II AS440S48TP MY16			**2016 ->**
F3GFE611G, F3GFL611G	353	480	
After / Before SCR catalytic converter, 667 mm., Black			**68006**
Stralis II AS440S50TFP			**2012 ->**
F3BE3681B, F3HFE611B	368	500	
After / Before SCR catalytic converter, 667 mm., Black			**68006**
Stralis II AS440S50TP			**2012 ->**
F3BE3681B, F3HFE611B	368	500	
After / Before SCR catalytic converter, 667 mm., Black			**68006**
Stralis II AS440S50TP			**2012 ->**
F3BE3681B, F3HFE611B	368	500	
After / Before SCR catalytic converter, 667 mm., Black			**68006**
Stralis II AS440S50TP			**2012 ->**
F3BE3681B, F3HFE611B	368	500	
After / Before SCR catalytic converter, 667 mm., Black			**68006**
Stralis II AS440S50TP			**2012 ->**
F3BE3681B, F3HFE611B	368	500	
After / Before SCR catalytic converter, 667 mm., Black			**68006**
Stralis II AS440S50TP MY16			**2016 ->**
F3HFE611B, F3HFL611B	368	500	
After / Before SCR catalytic converter, 667 mm., Black			**68006**
Stralis II AS440S56TFP			**2012 ->**
F3BE3681A, F3HFE611A	412	560	
After / Before SCR catalytic converter, 667 mm., Black			**68006**
Stralis II AS440S56TP			**2012 ->**
F3BE3681A, F3HFE611A	412	560	
After / Before SCR catalytic converter, 667 mm., Black			**68006**
Stralis II AS440S56TP			**2012 ->**
F3HFE611A	412	560	
After / Before SCR catalytic converter, 667 mm., Black			**68006**
Stralis II AS440S56TP			**2012 ->**
F3BE3681A, F3HFE611A	412	560	
After / Before SCR catalytic converter, 667 mm., Black			**68006**
Stralis II AS440S56TP			**2012 ->**
F3BE3681A, F3HFE611A	412	560	
After / Before SCR catalytic converter, 667 mm., Black			**68006**
Stralis II AS440S56TP MY16			**2016 ->**
F3HFE611A, F3HFL611A	412	560	
After / Before SCR catalytic converter, 667 mm., Black			**68006**
Stralis II AS440X42TP			**2017 ->**
F3GFE611F	309	420	
After / Before SCR catalytic converter, 667 mm., Black			**68006**
Stralis II AS440X46TP			**2017 ->**
F3GFE611E	338	460	
After / Before SCR catalytic converter, 667 mm., Black			**68006**

IVECO Cont.

Stralis II AS440X48TP			**2017 ->**
F3GFE611G	353	480	
After / Before SCR catalytic converter, 667 mm., Black			**68006**
Stralis II AS440X51T			**2017 ->**
F3HFE611G	375	510	
After / Before SCR catalytic converter, 667 mm., Black			**68006**
Stralis II AS440X51TP			**2017 ->**
F3HFE611G	375	510	
After / Before SCR catalytic converter, 667 mm., Black			**68006**
Stralis II AS440X51TP			**2017 ->**
F3HFE611G	375	510	
After / Before SCR catalytic converter, 667 mm., Black			**68006**
Stralis II AS440X57T			**2017 ->**
F3HFE611F	420	571	
After / Before SCR catalytic converter, 667 mm., Black			**68006**
Stralis II AS440X57TP			**2017 ->**
F3HFE611F	420	571	
After / Before SCR catalytic converter, 667 mm., Black			**68006**
Stralis II AS440X57TP			**2017 ->**
F3HFE611F	420	571	
After / Before SCR catalytic converter, 667 mm., Black			**68006**
Stralis II AT190S31			**2012 ->**
F2BE3681C	228	310	
After / Before SCR catalytic converter, 667 mm., Black			**68006**
Stralis II AT190S31 MY16			**2016 ->**
F2CFE611D	228	310	
After / Before SCR catalytic converter, 667 mm., Black			**68006**
Stralis II AT190S31FP			**2012 ->**
F2BE3681C	228	310	
After / Before SCR catalytic converter, 667 mm., Black			**68006**
Stralis II AT190S31FP			**2012 ->**
F2CFE611D	228	310	
After / Before SCR catalytic converter, 667 mm., Black			**68006**
Stralis II AT190S31FP MY16			**2016 ->**
F2CFE611D	228	310	
After / Before SCR catalytic converter, 667 mm., Black			**68006**
Stralis II AT190S31P			**2012 ->**
F2BE3681C	228	310	
After / Before SCR catalytic converter, 667 mm., Black			**68006**
Stralis II AT190S31P			**2012 ->**
F2CFE611D	228	310	
After / Before SCR catalytic converter, 667 mm., Black			**68006**
Stralis II AT190S31P MY16			**2016 ->**
F2CFE611D	228	310	
After / Before SCR catalytic converter, 667 mm., Black			**68006**
Stralis II AT190S33 MY16			**2016 ->**
F2CFE611C	243	330	
After / Before SCR catalytic converter, 667 mm., Black			**68006**
Stralis II AT190S33FP			**2012 ->**
F2BE3681B	243	330	
After / Before SCR catalytic converter, 667 mm., Black			**68006**
Stralis II AT190S33FP			**2012 ->**
F2CFE611C	243	330	
After / Before SCR catalytic converter, 667 mm., Black			**68006**
Stralis II AT190S33FP MY16			**2016 ->**
F2CFE611C	243	330	
After / Before SCR catalytic converter, 667 mm., Black			**68006**
Stralis II AT190S33P			**2012 ->**
F2BE3681B	243	330	
After / Before SCR catalytic converter, 667 mm., Black			**68006**
Stralis II AT190S33P			**2012 ->**
F2CFE611C	243	330	
After / Before SCR catalytic converter, 667 mm., Black			**68006**
Stralis II AT190S33P MY16			**2016 ->**
F2CFE611C	243	330	
After / Before SCR catalytic converter, 667 mm., Black			**68006**
Stralis II AT190S36 MY16			**2016 ->**
F2CFE611B	265	360	
After / Before SCR catalytic converter, 667 mm., Black			**68006**
Stralis II AT190S36FP			**2012 ->**
F2BE3681A	265	360	
After / Before SCR catalytic converter, 667 mm., Black			**68006**
Stralis II AT190S36FP			**2012 ->**
F2CFE611B	265	360	
After / Before SCR catalytic converter, 667 mm., Black			**68006**
Stralis II AT190S36FP MY16			**2016 ->**
F2CFE611B	265	360	
After / Before SCR catalytic converter, 667 mm., Black			**68006**
Stralis II AT190S36P			**2012 ->**
F2BE3681A	265	360	
After / Before SCR catalytic converter, 667 mm., Black			**68006**
Stralis II AT190S36P			**2012 ->**
F2CFE611B	265	360	
After / Before SCR catalytic converter, 667 mm., Black			**68006**

IVECO Cont.			
Stralis II AT190S36P MY16			**2016 ->**
F2CFE611B	265	360	
After / Before SCR catalytic converter, 667 mm., Black			**68006**
Stralis II AT190S40FP			**2012 ->**
F2CFE611A	294	400	
After / Before SCR catalytic converter, 667 mm., Black			**68006**
Stralis II AT190S40FP MY16			**2016 ->**
F2CFE611A	294	400	
After / Before SCR catalytic converter, 667 mm., Black			**68006**
Stralis II AT190S40P			**2012 ->**
F2CFE611A	294	400	
After / Before SCR catalytic converter, 667 mm., Black			**68006**
Stralis II AT190S40P MY16			**2016 ->**
F2CFE611A	294	400	
After / Before SCR catalytic converter, 667 mm., Black			**68006**
Stralis II AT190S42			**2012 ->**
F3GFE611D	309	420	
After / Before SCR catalytic converter, 667 mm., Black			**68006**
Stralis II AT190S42 MY16			**2016 ->**
F3GFE611F	309	420	
After / Before SCR catalytic converter, 667 mm., Black			**68006**
Stralis II AT190S42FP			**2012 ->**
F3AE3681D	310	421	
After / Before SCR catalytic converter, 667 mm., Black			**68006**
Stralis II AT190S42FP			**2012 ->**
F3GFE611D	309	420	
After / Before SCR catalytic converter, 667 mm., Black			**68006**
Stralis II AT190S42FP MY16			**2016 ->**
F3GFE611F	309	420	
After / Before SCR catalytic converter, 667 mm., Black			**68006**
Stralis II AT190S42P			**2012 ->**
F3AE3681D	310	421	
After / Before SCR catalytic converter, 667 mm., Black			**68006**
Stralis II AT190S42P			**2012 ->**
F3GFE611D	309	420	
After / Before SCR catalytic converter, 667 mm., Black			**68006**
Stralis II AT190S42P MY16			**2016 ->**
F3GFE611F	309	420	
After / Before SCR catalytic converter, 667 mm., Black			**68006**
Stralis II AT190S46FP			**2012 ->**
F3AE3681Y	338	460	
After / Before SCR catalytic converter, 667 mm., Black			**68006**
Stralis II AT190S46FP			**2012 ->**
F3GFE611B	338	460	
After / Before SCR catalytic converter, 667 mm., Black			**68006**
Stralis II AT190S46FP MY16			**2016 ->**
F3GFE611E	338	460	
After / Before SCR catalytic converter, 667 mm., Black			**68006**
Stralis II AT190S46P			**2012 ->**
F3AE3681Y	338	460	
After / Before SCR catalytic converter, 667 mm., Black			**68006**
Stralis II AT190S46P			**2012 ->**
F3GFE611B	338	460	
After / Before SCR catalytic converter, 667 mm., Black			**68006**
Stralis II AT190S46P MY16			**2016 ->**
F3GFE611E	338	460	
After / Before SCR catalytic converter, 667 mm., Black			**68006**
Stralis II AT190S48FP			**2012 ->**
F3GFE611A	353	480	
After / Before SCR catalytic converter, 667 mm., Black			**68006**
Stralis II AT190S48FP MY16			**2016 ->**
F3GFE611G	353	480	
After / Before SCR catalytic converter, 667 mm., Black			**68006**
Stralis II AT190S48P			**2012 ->**
F3GFE611A	353	480	
After / Before SCR catalytic converter, 667 mm., Black			**68006**
Stralis II AT190S48P MY16			**2016 ->**
F3GFE611G	353	480	
After / Before SCR catalytic converter, 667 mm., Black			**68006**
Stralis II AT190X31P			**2017 ->**
F2CFE611D	228	310	
After / Before SCR catalytic converter, 667 mm., Black			**68006**
Stralis II AT190X33			**2017 ->**
F2CFE611C	243	330	
After / Before SCR catalytic converter, 667 mm., Black			**68006**
Stralis II AT190X36P			**2017 ->**
F2CFE611B	265	360	
After / Before SCR catalytic converter, 667 mm., Black			**68006**
Stralis II AT190X40			**2017 ->**
F2CFE611A	294	400	
After / Before SCR catalytic converter, 667 mm., Black			**68006**
Stralis II AT260S31FP			**2012 ->**
F2BE3681C	228	310	
After / Before SCR catalytic converter, 667 mm., Black			**68006**

IVECO Cont.			
Stralis II AT260S31FP MY16			**2016 ->**
F2CFE611D	228	310	
After / Before SCR catalytic converter, 667 mm., Black			**68006**
Stralis II AT260S31P			**2012 ->**
F2BE3681C	228	310	
After / Before SCR catalytic converter, 667 mm., Black			**68006**
Stralis II AT260S31P			**2012 ->**
F2CFE611D	228	310	
After / Before SCR catalytic converter, 667 mm., Black			**68006**
Stralis II AT260S31P			**2012 ->**
F2CFE611D	228	310	
After / Before SCR catalytic converter, 667 mm., Black			**68006**
Stralis II AT260S31P MY16			**2016 ->**
F2CFE611D	228	310	
After / Before SCR catalytic converter, 667 mm., Black			**68006**
Stralis II AT260S31P MY16			**2016 ->**
F2CFE611D	228	310	
After / Before SCR catalytic converter, 667 mm., Black			**68006**
Stralis II AT260S33FP			**2012 ->**
F2BE3681B	243	330	
After / Before SCR catalytic converter, 667 mm., Black			**68006**
Stralis II AT260S33FP			**2012 ->**
F2BE3681B	243	330	
After / Before SCR catalytic converter, 667 mm., Black			**68006**
Stralis II AT260S33FP			**2012 ->**
F2CFE611C	243	330	
After / Before SCR catalytic converter, 667 mm., Black			**68006**
Stralis II AT260S33FP MY16			**2016 ->**
F2CFE611C	243	330	
After / Before SCR catalytic converter, 667 mm., Black			**68006**
Stralis II AT260S33P			**2012 ->**
F2BE3681B	243	330	
After / Before SCR catalytic converter, 667 mm., Black			**68006**
Stralis II AT260S33P			**2012 ->**
F2CFE611C	243	330	
After / Before SCR catalytic converter, 667 mm., Black			**68006**
Stralis II AT260S33P			**2012 ->**
F2CFE611C	243	330	
After / Before SCR catalytic converter, 667 mm., Black			**68006**
Stralis II AT260S33P MY16			**2016 ->**
F2CFE611C	243	330	
After / Before SCR catalytic converter, 667 mm., Black			**68006**
Stralis II AT260S33P MY16			**2016 ->**
F2CFE611C	243	330	
After / Before SCR catalytic converter, 667 mm., Black			**68006**
Stralis II AT260S36			**2012 ->**
F2BE3681A	265	360	
After / Before SCR catalytic converter, 667 mm., Black			**68006**
Stralis II AT260S36FP			**2012 ->**
F2BE3681A	265	360	
After / Before SCR catalytic converter, 667 mm., Black			**68006**
Stralis II AT260S36FP			**2012 ->**
F2CFE611B	265	360	
After / Before SCR catalytic converter, 667 mm., Black			**68006**
Stralis II AT260S36FP MY16			**2016 ->**
F2CFE611B	265	360	
After / Before SCR catalytic converter, 667 mm., Black			**68006**
Stralis II AT260S36FP MY16			**2016 ->**
F2CFE611B	265	360	
After / Before SCR catalytic converter, 667 mm., Black			**68006**
Stralis II AT260S36P			**2012 ->**
F2BE3681A	265	360	
After / Before SCR catalytic converter, 667 mm., Black			**68006**
Stralis II AT260S36P			**2012 ->**
F2BE3681A	265	360	
After / Before SCR catalytic converter, 667 mm., Black			**68006**
Stralis II AT260S36P			**2012 ->**
F2CFE611B	265	360	
After / Before SCR catalytic converter, 667 mm., Black			**68006**
Stralis II AT260S36P			**2012 ->**
F2CFE611B	265	360	
After / Before SCR catalytic converter, 667 mm., Black			**68006**
Stralis II AT260S36P MY16			**2016 ->**
F2CFE611B	265	360	
After / Before SCR catalytic converter, 667 mm., Black			**68006**
Stralis II AT260S36P MY16			**2016 ->**
F2CFE611B	265	360	
After / Before SCR catalytic converter, 667 mm., Black			**68006**
Stralis II AT260S40FP			**2012 ->**
F2CFE611A	294	400	
After / Before SCR catalytic converter, 667 mm., Black			**68006**
Stralis II AT260S40FP			**2012 ->**
F2CFE611A	294	400	
After / Before SCR catalytic converter, 667 mm., Black			**68006**

IVECO Cont.

Stralis II AT260S40FP MY16			**2016 ->**
F2CFE611A	294	400	
After / Before SCR catalytic converter, 667 mm., Black			**68006**
Stralis II AT260S40FP MY16			**2016 ->**
F2CFE611A	294	400	
After / Before SCR catalytic converter, 667 mm., Black			**68006**
Stralis II AT260S40P			**2012 ->**
F2CFE611A	294	400	
After / Before SCR catalytic converter, 667 mm., Black			**68006**
Stralis II AT260S40P			**2012 ->**
F2CFE611A	294	400	
After / Before SCR catalytic converter, 667 mm., Black			**68006**
Stralis II AT260S40P MY16			**2016 ->**
F2CFE611A	294	400	
After / Before SCR catalytic converter, 667 mm., Black			**68006**
Stralis II AT260S40P MY16			**2016 ->**
F2CFE611A	294	400	
After / Before SCR catalytic converter, 667 mm., Black			**68006**
Stralis II AT260S42FP			**2012 ->**
F3AE3681D	310	421	
After / Before SCR catalytic converter, 667 mm., Black			**68006**
Stralis II AT260S42FP			**2012 ->**
F3AE3681D	310	421	
After / Before SCR catalytic converter, 667 mm., Black			**68006**
Stralis II AT260S42FP			**2012 ->**
F3GFE611D	309	420	
After / Before SCR catalytic converter, 667 mm., Black			**68006**
Stralis II AT260S42FP			**2012 ->**
F3GFE611D	309	420	
After / Before SCR catalytic converter, 667 mm., Black			**68006**
Stralis II AT260S42FP MY16			**2016 ->**
F3GFE611F	309	420	
After / Before SCR catalytic converter, 667 mm., Black			**68006**
Stralis II AT260S42FP MY16			**2016 ->**
F3GFE611F	309	420	
After / Before SCR catalytic converter, 667 mm., Black			**68006**
Stralis II AT260S42P			**2012 ->**
F3AE3681D	310	421	
After / Before SCR catalytic converter, 667 mm., Black			**68006**
Stralis II AT260S42P			**2012 ->**
F3AE3681D	310	421	
After / Before SCR catalytic converter, 667 mm., Black			**68006**
Stralis II AT260S42P			**2012 ->**
F3GFE611D	309	420	
After / Before SCR catalytic converter, 667 mm., Black			**68006**
Stralis II AT260S42P			**2012 ->**
F3GFE611D	309	420	
After / Before SCR catalytic converter, 667 mm., Black			**68006**
Stralis II AT260S42P MY16			**2016 ->**
F3GFE611F	309	420	
After / Before SCR catalytic converter, 667 mm., Black			**68006**
Stralis II AT260S42P MY16			**2016 ->**
F3GFE611F	309	420	
After / Before SCR catalytic converter, 667 mm., Black			**68006**
Stralis II AT260S46FP			**2012 ->**
F3AE3681Y	338	460	
After / Before SCR catalytic converter, 667 mm., Black			**68006**
Stralis II AT260S46FP			**2012 ->**
F3GFE611B	338	460	
After / Before SCR catalytic converter, 667 mm., Black			**68006**
Stralis II AT260S46FP			**2012 ->**
F3GFE611B	338	460	
After / Before SCR catalytic converter, 667 mm., Black			**68006**
Stralis II AT260S46FP			**2012 ->**
F3AE3681Y	338	460	
After / Before SCR catalytic converter, 667 mm., Black			**68006**
Stralis II AT260S46FP MY16			**2016 ->**
F3GFE611E	338	460	
After / Before SCR catalytic converter, 667 mm., Black			**68006**
Stralis II AT260S46FP MY16			**2016 ->**
F3GFE611E	338	460	
After / Before SCR catalytic converter, 667 mm., Black			**68006**
Stralis II AT260S46P			**2012 ->**
F3AE3681Y	338	460	
After / Before SCR catalytic converter, 667 mm., Black			**68006**
Stralis II AT260S46P			**2012 ->**
F3AE3681Y	338	460	
After / Before SCR catalytic converter, 667 mm., Black			**68006**
Stralis II AT260S46P			**2012 ->**
F3GFE611B	338	460	
After / Before SCR catalytic converter, 667 mm., Black			**68006**
Stralis II AT260S46P			**2012 ->**
F3GFE611B	338	460	
After / Before SCR catalytic converter, 667 mm., Black			**68006**

IVECO Cont.

Stralis II AT260S46P MY16			**2016 ->**
F3GFE611E	338	460	
After / Before SCR catalytic converter, 667 mm., Black			**68006**
Stralis II AT260S46P MY16			**2016 ->**
F3GFE611E	338	460	
After / Before SCR catalytic converter, 667 mm., Black			**68006**
Stralis II AT260S48FP			**2012 ->**
F3GFE611A	353	480	
After / Before SCR catalytic converter, 667 mm., Black			**68006**
Stralis II AT260S48FP			**2012 ->**
F3BE3681H	353	480	
After / Before SCR catalytic converter, 667 mm., Black			**68006**
Stralis II AT260S48FP MY16			**2016 ->**
F3GFE611G	353	480	
After / Before SCR catalytic converter, 667 mm., Black			**68006**
Stralis II AT260S48FP MY16			**2016 ->**
F3GFE611G	353	480	
After / Before SCR catalytic converter, 667 mm., Black			**68006**
Stralis II AT260S48P			**2012 ->**
F3GFE611A	353	480	
After / Before SCR catalytic converter, 667 mm., Black			**68006**
Stralis II AT260S48P			**2012 ->**
F3GFE611A	353	480	
After / Before SCR catalytic converter, 667 mm., Black			**68006**
Stralis II AT260S48P			**2012 ->**
F3BE3681H	353	480	
After / Before SCR catalytic converter, 667 mm., Black			**68006**
Stralis II AT260S48P MY16			**2016 ->**
F3GFE611G	353	480	
After / Before SCR catalytic converter, 667 mm., Black			**68006**
Stralis II AT260S48P MY16			**2016 ->**
F3GFE611G	353	480	
After / Before SCR catalytic converter, 667 mm., Black			**68006**
Stralis II AT260X31P			**2017 ->**
F2CFE611D	228	310	
After / Before SCR catalytic converter, 667 mm., Black			**68006**
Stralis II AT260X33P			**2017 ->**
F2CFE611C	243	330	
After / Before SCR catalytic converter, 667 mm., Black			**68006**
Stralis II AT260X36			**2017 ->**
F2CFE611B	265	360	
After / Before SCR catalytic converter, 667 mm., Black			**68006**
Stralis II AT260X40P			**2017 ->**
F2CFE611A	294	400	
After / Before SCR catalytic converter, 667 mm., Black			**68006**
Stralis II AT260X42			**2017 ->**
F3GFE611F	309	420	
After / Before SCR catalytic converter, 667 mm., Black			**68006**
Stralis II AT260X42P			**2017 ->**
F3GFE611F	309	420	
After / Before SCR catalytic converter, 667 mm., Black			**68006**
Stralis II AT260X42P			**2017 ->**
F3GFE611F	309	420	
After / Before SCR catalytic converter, 667 mm., Black			**68006**
Stralis II AT260X46			**2017 ->**
F3GFE611E	338	460	
After / Before SCR catalytic converter, 667 mm., Black			**68006**
Stralis II AT260X46P			**2017 ->**
F3GFE611E	338	460	
After / Before SCR catalytic converter, 667 mm., Black			**68006**
Stralis II AT260X46P			**2017 ->**
F3GFE611E	338	460	
After / Before SCR catalytic converter, 667 mm., Black			**68006**
Stralis II AT260X48			**2017 ->**
F3GFE611G	353	480	
After / Before SCR catalytic converter, 667 mm., Black			**68006**
Stralis II AT260X48P			**2017 ->**
F3GFE611G	353	480	
After / Before SCR catalytic converter, 667 mm., Black			**68006**
Stralis II AT260X48P			**2017 ->**
F3GFE611G	353	480	
After / Before SCR catalytic converter, 667 mm., Black			**68006**
Stralis II AT320S42P			**2012 ->**
F3AE3681D	310	421	
After / Before SCR catalytic converter, 667 mm., Black			**68006**
Stralis II AT320S42P MY16			**2016 ->**
F3GFE611F	309	420	
After / Before SCR catalytic converter, 667 mm., Black			**68006**
Stralis II AT320X42P			**2017 ->**
F3GFE611F	309	420	
After / Before SCR catalytic converter, 667 mm., Black			**68006**
Stralis II AT320X46P			**2017 ->**
F3GFE611E	338	460	
After / Before SCR catalytic converter, 667 mm., Black			**68006**

IVECO Cont.			
Stralis II AT320X48P			**2017 ->**
F3GFE611G	353	480	
After / Before SCR catalytic converter, 667 mm., Black			**68006**
Stralis II AT340X40			**2017 ->**
F2CFE611A	294	400	
After / Before SCR catalytic converter, 667 mm., Black			**68006**
Stralis II AT340X42			**2017 ->**
F3GFE611F	309	420	
After / Before SCR catalytic converter, 667 mm., Black			**68006**
Stralis II AT340X42P			**2017 ->**
F3GFE611F	309	420	
After / Before SCR catalytic converter, 667 mm., Black			**68006**
Stralis II AT340X46			**2017 ->**
F3GFE611E	338	460	
After / Before SCR catalytic converter, 667 mm., Black			**68006**
Stralis II AT340X46P			**2017 ->**
F3GFE611E	338	460	
After / Before SCR catalytic converter, 667 mm., Black			**68006**
Stralis II AT340X48			**2017 ->**
F3GFE611G	353	480	
After / Before SCR catalytic converter, 667 mm., Black			**68006**
Stralis II AT340X48P			**2017 ->**
F3GFE611G	353	480	
After / Before SCR catalytic converter, 667 mm., Black			**68006**
Stralis II AT440S33TP			**2012 ->**
F2CFE611C	243	330	
After / Before SCR catalytic converter, 667 mm., Black			**68006**
Stralis II AT440S33TP			**2012 ->**
F2BE3681B	243	330	
After / Before SCR catalytic converter, 667 mm., Black			**68006**
Stralis II AT440S33TP CNG			**2012 ->**
F2BFA601D	243	330	
After / Before SCR catalytic converter, 667 mm., Black			**68006**
Stralis II AT440S33TP MY16			**2016 ->**
F2CFE611C	243	330	
After / Before SCR catalytic converter, 667 mm., Black			**68006**
Stralis II AT440S36TP			**2012 ->**
F2BE3681A	265	360	
After / Before SCR catalytic converter, 667 mm., Black			**68006**
Stralis II AT440S36TP			**2012 ->**
F2CFE611B	265	360	
After / Before SCR catalytic converter, 667 mm., Black			**68006**
Stralis II AT440S36TP MY16			**2016 ->**
F2CFE611B	265	360	
After / Before SCR catalytic converter, 667 mm., Black			**68006**
Stralis II AT440S40TP			**2012 ->**
F2CFE611A	294	400	
After / Before SCR catalytic converter, 667 mm., Black			**68006**
Stralis II AT440S40TP MY16			**2016 ->**
F2CFE611A	294	400	
After / Before SCR catalytic converter, 667 mm., Black			**68006**
Stralis II AT440S42TFP			**2012 ->**
F3GFE611D	309	420	
After / Before SCR catalytic converter, 667 mm., Black			**68006**
Stralis II AT440S42TFP			**2012 ->**
F3AE3681D	310	421	
After / Before SCR catalytic converter, 667 mm., Black			**68006**
Stralis II AT440S42TFP MY16			**2016 ->**
F3GFE611F, F3GFL611F	309	420	
After / Before SCR catalytic converter, 667 mm., Black			**68006**
Stralis II AT440S42TP			**2012 ->**
F3AE3681D	310	421	
After / Before SCR catalytic converter, 667 mm., Black			**68006**
Stralis II AT440S42TP			**2012 ->**
F3GFE611D	309	420	
After / Before SCR catalytic converter, 667 mm., Black			**68006**
Stralis II AT440S42TP			**2012 ->**
F3GFE611D	309	420	
After / Before SCR catalytic converter, 667 mm., Black			**68006**
Stralis II AT440S42TP			**2012 ->**
F3GFE611D	309	420	
After / Before SCR catalytic converter, 667 mm., Black			**68006**
Stralis II AT440S42TP			**2012 ->**
F3AE3681D	310	421	
After / Before SCR catalytic converter, 667 mm., Black			**68006**
Stralis II AT440S42TP			**2012 ->**
F3AE3681D	310	421	
After / Before SCR catalytic converter, 667 mm., Black			**68006**
Stralis II AT440S42TP MY16			**2016 ->**
F3GFE611F, F3GFL611F	309	420	
After / Before SCR catalytic converter, 667 mm., Black			**68006**
Stralis II AT440S42TP MY16			**2016 ->**
F3GFE611F	309	420	
After / Before SCR catalytic converter, 667 mm., Black			**68006**

IVECO Cont.			
Stralis II AT440S46TFP			**2012 ->**
F3AE3681Y	338	460	
After / Before SCR catalytic converter, 667 mm., Black			**68006**
Stralis II AT440S46TFP			**2012 ->**
F3GFE611B	338	460	
After / Before SCR catalytic converter, 667 mm., Black			**68006**
Stralis II AT440S46TFP MY16			**2016 ->**
F3GFE611E, F3GFL611E	338	460	
After / Before SCR catalytic converter, 667 mm., Black			**68006**
Stralis II AT440S46TP			**2012 ->**
F3AE3681Y	338	460	
After / Before SCR catalytic converter, 667 mm., Black			**68006**
Stralis II AT440S46TP			**2012 ->**
F3GFE611B	338	460	
After / Before SCR catalytic converter, 667 mm., Black			**68006**
Stralis II AT440S46TP			**2012 ->**
F3GFE611B	338	460	
After / Before SCR catalytic converter, 667 mm., Black			**68006**
Stralis II AT440S46TP			**2012 ->**
F3GFE611B	338	460	
After / Before SCR catalytic converter, 667 mm., Black			**68006**
Stralis II AT440S46TP			**2012 ->**
F3GFE611B	338	460	
After / Before SCR catalytic converter, 667 mm., Black			**68006**
Stralis II AT440S46TP			**2012 ->**
F3AE3681Y	338	460	
After / Before SCR catalytic converter, 667 mm., Black			**68006**
Stralis II AT440S46TP			**2012 ->**
F3AE3681Y	338	460	
After / Before SCR catalytic converter, 667 mm., Black			**68006**
Stralis II AT440S46TP MY16			**2016 ->**
F3GFE611E, F3GFL611E	338	460	
After / Before SCR catalytic converter, 667 mm., Black			**68006**
Stralis II AT440S46TP MY16			**2016 ->**
F3GFE611E	338	460	
After / Before SCR catalytic converter, 667 mm., Black			**68006**
Stralis II AT440S46TP MY16			**2016 ->**
F3GFE611E	338	460	
After / Before SCR catalytic converter, 667 mm., Black			**68006**
Stralis II AT440S48TFP			**2012 ->**
F3GFE611A	353	480	
After / Before SCR catalytic converter, 667 mm., Black			**68006**
Stralis II AT440S48TP			**2012 ->**
F3GFE611A	353	480	
After / Before SCR catalytic converter, 667 mm., Black			**68006**
Stralis II AT440S48TP			**2012 ->**
F3GFE611A	353	480	
After / Before SCR catalytic converter, 667 mm., Black			**68006**
Stralis II AT440S48TP			**2012 ->**
F3BE3681H	353	480	
After / Before SCR catalytic converter, 667 mm., Black			**68006**
Stralis II AT440S48TP MY16			**2016 ->**
F3GFE611G, F3GFL611G	353	480	
After / Before SCR catalytic converter, 667 mm., Black			**68006**
Stralis II AT440S48TP MY16			**2016 ->**
F3GFE611G	353	480	
After / Before SCR catalytic converter, 667 mm., Black			**68006**
Stralis II AT440X42TP			**2017 ->**
F3GFE611F	309	420	
After / Before SCR catalytic converter, 667 mm., Black			**68006**
Stralis II AT440X46TP			**2017 ->**
F3GFE611E	338	460	
After / Before SCR catalytic converter, 667 mm., Black			**68006**
Stralis II AT440X46TP			**2017 ->**
F3GFE611E	338	460	
After / Before SCR catalytic converter, 667 mm., Black			**68006**
Stralis II AT440X48T			**2017 ->**
F3GFE611G	353	480	
After / Before SCR catalytic converter, 667 mm., Black			**68006**
Stralis II AT440X48T			**2017 ->**
F3GFE611G	353	480	
After / Before SCR catalytic converter, 667 mm., Black			**68006**
Stralis II AT440X48TP			**2017 ->**
F3GFE611G	353	480	
After / Before SCR catalytic converter, 667 mm., Black			**68006**
Stralis II AT440X48TP			**2017 ->**
F3GFE611G	353	480	
After / Before SCR catalytic converter, 667 mm., Black			**68006**
Trakker I AD 190T31 W, AT 190T31 W			**2004-12**
F2BE0681B	228	310	
After / Before SCR catalytic converter, 667 mm., Black			**68006**
Trakker I AD 190T31 W, AT 190T31 W			**2005-07**
F2BE0681B, F2BE3681C	228	310	
After / Before SCR catalytic converter, 667 mm., Black			**68006**

IVECO Cont.

Trakker I AD 190T33 W, AT 190T33 W		**2006-12**
F2BE3681B	243 330	
After / Before SCR catalytic converter, 667 mm., Black		**68006**
Trakker I AD 190T33, AT 190T33		**2006-12**
F2BE3681B	243 330	
After / Before SCR catalytic converter, 667 mm., Black		**68006**
Trakker I AD 190T35, AD 190T36, AT 190T35, AT 190T36		**2004-12**
F2BE0681A, F2BE3681A	259 352	
After / Before SCR catalytic converter, 667 mm., Black		**68006**
Trakker I AD 190T44 W, AD 190T45 W, AT 190T44 W, AD 190T45W		**2004-12**
F3BE0681C, F3BE3681C	324 440	
After / Before SCR catalytic converter, 667 mm., Black		**68006**
Trakker I AD 190T44, AD 190T45, AT 190T44, AT 190T45		**2004-12**
F3BE0681C, F3BE3681C	324 440	
After / Before SCR catalytic converter, 667 mm., Black		**68006**
Trakker I AD 260T33 B		**2007-07**
F2BE3681B	243 330	
After / Before SCR catalytic converter, 667 mm., Black		**68006**
Trakker I AD 260T33, AD 380T33, AT 260T33, AT 380T33		**2006-12**
F2BE3681B	243 330	
After / Before SCR catalytic converter, 667 mm., Black		**68006**
Trakker I AD 260T35, 260T36, 380T36, AT 260T35, 260T36, 380T36		**2004-12**
F2BE0681A, F2BE3681A	259 352	
After / Before SCR catalytic converter, 667 mm., Black		**68006**
Trakker I AD 260T36 B		**2007-12**
F2BE3681A	265 360	
After / Before SCR catalytic converter, 667 mm., Black		**68006**
Trakker I AD 260T36 W, AD 380T36 W, AT 260T36 W, AT 380T36 W		**2004-12**
F2BE3681A	265 360	
After / Before SCR catalytic converter, 667 mm., Black		**68006**
Trakker I AD 260T36, AT 260T36		**2006-07**
F2BE3681A	265 360	
After / Before SCR catalytic converter, 667 mm., Black		**68006**
Trakker I AD 260T41 W, AD 380T41 W, AT 260T41 W, AT 380T41 W		**2006-12**
F3BE3681D	302 410	
After / Before SCR catalytic converter, 667 mm., Black		**68006**
Trakker I AD 260T45 W, AD 380T45 W, AT 260T45 W, AT 380T45 W		**2006-12**
F3BE3681C	332 450	
After / Before SCR catalytic converter, 667 mm., Black		**68006**
Trakker I AD 340T36 B		**2006-12**
F2BE3681A	265 360	
After / Before SCR catalytic converter, 667 mm., Black		**68006**
Trakker I AD 340T36, AT 340T36		**2006-12**
F2BE3681A	265 360	
After / Before SCR catalytic converter, 667 mm., Black		**68006**
Trakker I AD 340T36, AT 340T36		**2007-12**
F2BE3681A	265 360	
After / Before SCR catalytic converter, 667 mm., Black		**68006**
Trakker I AD 340T41 B		**2006-12**
F3BE3681D	302 411	
After / Before SCR catalytic converter, 667 mm., Black		**68006**
Trakker I AD 340T41, AT 340T41		**2006-12**
F3BE3681D	302 410	
After / Before SCR catalytic converter, 667 mm., Black		**68006**
Trakker I AD 340T44 B, AT 340T44 B		**2005-07**
F3BE0681C	324 440	
After / Before SCR catalytic converter, 667 mm., Black		**68006**
Trakker I AD 340T45 B		**2006-12**
F3BE3681C	332 450	
After / Before SCR catalytic converter, 667 mm., Black		**68006**
Trakker I AD 340T45, AT 340T45		**2006-12**
F3BE3681C	332 450	
After / Before SCR catalytic converter, 667 mm., Black		**68006**
Trakker I AD 380T36 W, AT 380T36 W		**2006-07**
F2BE3681A	265 360	
After / Before SCR catalytic converter, 667 mm., Black		**68006**
Trakker I AD 400T36 T, AT 400T36 T		**2004-12**
F2BE3681A	265 360	
After / Before SCR catalytic converter, 667 mm., Black		**68006**
Trakker I AD 400T41 WT, AT 400T41 WT		**2006-12**
F3BE3681D	302 410	
After / Before SCR catalytic converter, 667 mm., Black		**68006**
Trakker I AD 400T45 WT, AT 400T45 WT		**2006-12**
F3BE3681C	332 450	
After / Before SCR catalytic converter, 667 mm., Black		**68006**
Trakker I AD 410T36, AT 410T36		**2006 ->**
F2BE3681A	265 360	
After / Before SCR catalytic converter, 667 mm., Black		**68006**
Trakker I AD 410T41, AT 410T41		**2006-12**
F3BE3681D	302 410	
After / Before SCR catalytic converter, 667 mm., Black		**68006**
Trakker I AD 410T45 W		**2006-12**
F3BE3681C	332 450	
After / Before SCR catalytic converter, 667 mm., Black		**68006**

IVECO Cont.

Trakker I AD 410T45 W		**2007-12**
F3BE3681C	332 450	
After / Before SCR catalytic converter, 667 mm., Black		**68006**
Trakker I AD 410T45, AT 410T45		**2006-12**
F3BE3681C	332 450	
After / Before SCR catalytic converter, 667 mm., Black		**68006**
Trakker I AD 410T50, AT 410T50		**2006-12**
F3BE3681B	368 500	
After / Before SCR catalytic converter, 667 mm., Black		**68006**
Trakker I AD 720T44 T, AT 720T44 T		**2005-07**
F3BE0681C	324 440	
After / Before SCR catalytic converter, 667 mm., Black		**68006**
Trakker I AD 720T44 WT, AT 720T44 WT		**2005-07**
F3BE0681C	324 440	
After / Before SCR catalytic converter, 667 mm., Black		**68006**
Trakker I AD190T36W		**2007-12**
F2BE3681A	265 360	
After / Before SCR catalytic converter, 667 mm., Black		**68006**
Trakker I AD190T36WP		**2007-12**
F2BE3681A	265 360	
After / Before SCR catalytic converter, 667 mm., Black		**68006**
Trakker I AD190T41		**2004-12**
F3BE3681D	302 411	
After / Before SCR catalytic converter, 667 mm., Black		**68006**
Trakker I AD190T41W		**2004-12**
F3BE3681D	302 411	
After / Before SCR catalytic converter, 667 mm., Black		**68006**
Trakker I AD260T33		**2004-12**
F2BE3681B	243 330	
After / Before SCR catalytic converter, 667 mm., Black		**68006**
Trakker I AD260T41		**2004-12**
F3BE3681D	302 411	
After / Before SCR catalytic converter, 667 mm., Black		**68006**
Trakker I AD260T41		**2004-12**
F3BE3681D	302 411	
After / Before SCR catalytic converter, 667 mm., Black		**68006**
Trakker I AD260T41P		**2004-12**
F3BE3681D	302 411	
After / Before SCR catalytic converter, 667 mm., Black		**68006**
Trakker I AD260T41P		**2004-12**
F3BE3681D	302 411	
After / Before SCR catalytic converter, 667 mm., Black		**68006**
Trakker I AD260T45		**2004-12**
F3BE3681C	332 451	
After / Before SCR catalytic converter, 667 mm., Black		**68006**
Trakker I AD260T45		**2004-12**
F3BE3681C	332 451	
After / Before SCR catalytic converter, 667 mm., Black		**68006**
Trakker I AD260T45P		**2004-12**
F3BE3681C	332 451	
After / Before SCR catalytic converter, 667 mm., Black		**68006**
Trakker I AD260T45P		**2004-12**
F3BE3681C	332 451	
After / Before SCR catalytic converter, 667 mm., Black		**68006**
Trakker I AD260T45W		**2004-07**
F3BE3681C	332 451	
After / Before SCR catalytic converter, 667 mm., Black		**68006**
Trakker I AD260T50		**2004-12**
F3BE3681B	368 500	
After / Before SCR catalytic converter, 667 mm., Black		**68006**
Trakker I AD260T50		**2004-12**
F3BE3681B	368 500	
After / Before SCR catalytic converter, 667 mm., Black		**68006**
Trakker I AD260T50P		**2007-12**
F3BE3681B	368 500	
After / Before SCR catalytic converter, 667 mm., Black		**68006**
Trakker I AD260T50P		**2007-12**
F3BE3681B	368 500	
After / Before SCR catalytic converter, 667 mm., Black		**68006**
Trakker I AD380T36		**2004-12**
F2BE3681A	265 360	
After / Before SCR catalytic converter, 667 mm., Black		**68006**
Trakker I AD380T36		**2004-07**
F2BE3681A	265 360	
After / Before SCR catalytic converter, 667 mm., Black		**68006**
Trakker I AD380T36		**2004-07**
F2BE3681A	265 360	
After / Before SCR catalytic converter, 667 mm., Black		**68006**
Trakker I AD380T36		**2004-12**
F2BE3681A	265 360	
After / Before SCR catalytic converter, 667 mm., Black		**68006**
Trakker I AD380T36P		**2004-07**
F2BE3681A	265 360	
After / Before SCR catalytic converter, 667 mm., Black		**68006**

IVECO Cont.

Trakker I AD380T36P			**2004-07**
F2BE3681A	265	360	
After / Before SCR catalytic converter, 667 mm., Black			**68006**
Trakker I AD380T41			**2004-12**
F3BE3681D	302	411	
After / Before SCR catalytic converter, 667 mm., Black			**68006**
Trakker I AD380T41P			**2007-12**
F3BE3681D	302	411	
After / Before SCR catalytic converter, 667 mm., Black			**68006**
Trakker I AD380T41W			**2007-12**
F3BE3681D	302	411	
After / Before SCR catalytic converter, 667 mm., Black			**68006**
Trakker I AD380T45			**2004-12**
F3BE3681C	332	451	
After / Before SCR catalytic converter, 667 mm., Black			**68006**
Trakker I AD380T45			**2004-07**
F3BE3681C	332	451	
After / Before SCR catalytic converter, 667 mm., Black			**68006**
Trakker I AD380T45			**2004-07**
F3BE3681C	332	451	
After / Before SCR catalytic converter, 667 mm., Black			**68006**
Trakker I AD380T45			**2004-12**
F3BE3681C	332	451	
After / Before SCR catalytic converter, 667 mm., Black			**68006**
Trakker I AD380T45P			**2007-12**
F3BE3681C	332	451	
After / Before SCR catalytic converter, 667 mm., Black			**68006**
Trakker I AD380T45P			**2004-07**
F3BE3681C	332	451	
After / Before SCR catalytic converter, 667 mm., Black			**68006**
Trakker I AD380T45P			**2004-07**
F3BE3681C	332	451	
After / Before SCR catalytic converter, 667 mm., Black			**68006**
Trakker I AD380T45P			**2007-12**
F3BE3681C	332	451	
After / Before SCR catalytic converter, 667 mm., Black			**68006**
Trakker I AD380T45W			**2007-12**
F3BE3681C	332	451	
After / Before SCR catalytic converter, 667 mm., Black			**68006**
Trakker I AD380T50			**2004-12**
F3BE3681B	368	500	
After / Before SCR catalytic converter, 667 mm., Black			**68006**
Trakker I AD380T50			**2004-12**
F3BE3681B	368	500	
After / Before SCR catalytic converter, 667 mm., Black			**68006**
Trakker I AD380T50P			**2007-12**
F3BE3681B	368	500	
After / Before SCR catalytic converter, 667 mm., Black			**68006**
Trakker I AD380T50P			**2007-12**
F3BE3681B	368	500	
After / Before SCR catalytic converter, 667 mm., Black			**68006**
Trakker I AD400T41			**2004-12**
F3BE3681D	302	411	
After / Before SCR catalytic converter, 667 mm., Black			**68006**
Trakker I AD400T41P			**2004-12**
F3BE3681D	302	411	
After / Before SCR catalytic converter, 667 mm., Black			**68006**
Trakker I AD400T45			**2004-12**
F3BE3681C	332	451	
After / Before SCR catalytic converter, 667 mm., Black			**68006**
Trakker I AD400T45P			**2004-12**
F3BE3681C	332	451	
After / Before SCR catalytic converter, 667 mm., Black			**68006**
Trakker I AD400T50			**2004-12**
F3BE3681B	368	500	
After / Before SCR catalytic converter, 667 mm., Black			**68006**
Trakker I AD400T50P			**2004-12**
F3BE3681B	368	500	
After / Before SCR catalytic converter, 667 mm., Black			**68006**
Trakker I AD410T36			**2004-12**
F2BE3681A	265	360	
After / Before SCR catalytic converter, 667 mm., Black			**68006**
Trakker I AD410T41			**2004-12**
F3BE3681D	302	411	
After / Before SCR catalytic converter, 667 mm., Black			**68006**
Trakker I AD410T45			**2004-12**
F3BE3681C	332	451	
After / Before SCR catalytic converter, 667 mm., Black			**68006**
Trakker I AD410T45W			**2007-12**
F3BE3681C	332	451	
After / Before SCR catalytic converter, 667 mm., Black			**68006**
Trakker I AD410T50			**2004-12**
F3BE3681B	368	500	
After / Before SCR catalytic converter, 667 mm., Black			**68006**

FAE

IVECO Cont.

Trakker I AD410T50P			**2007-12**
F3BE3681B	368	500	
After / Before SCR catalytic converter, 667 mm., Black			**68006**
Trakker I AD440T41			**2007-12**
F3BE3681D	302	411	
After / Before SCR catalytic converter, 667 mm., Black			**68006**
Trakker I AD440T41P			**2004-12**
F3BE3681D	302	411	
After / Before SCR catalytic converter, 667 mm., Black			**68006**
Trakker I AD440T45			**2004-12**
F3BE3681C	332	451	
After / Before SCR catalytic converter, 667 mm., Black			**68006**
Trakker I AD440T45P			**2004-12**
F3BE3681C	332	451	
After / Before SCR catalytic converter, 667 mm., Black			**68006**
Trakker I AD440T50			**2004-07**
F3BE3681B	368	500	
After / Before SCR catalytic converter, 667 mm., Black			**68006**
Trakker I AD440T50P			**2004-12**
F3BE3681B	368	500	
After / Before SCR catalytic converter, 667 mm., Black			**68006**
Trakker I AD720T41			**2004-12**
F3BE3681D	302	411	
After / Before SCR catalytic converter, 667 mm., Black			**68006**
Trakker I AD720T41P			**2007-12**
F3BE3681D	302	411	
After / Before SCR catalytic converter, 667 mm., Black			**68006**
Trakker I AD720T41W			**2004-12**
F3BE3681D	302	411	
After / Before SCR catalytic converter, 667 mm., Black			**68006**
Trakker I AD720T44W			**2004-12**
F3BE0681C, F3BEE681C	324	441	
After / Before SCR catalytic converter, 667 mm., Black			**68006**
Trakker I AD720T50			**2004-12**
F3BE3681B	368	500	
After / Before SCR catalytic converter, 667 mm., Black			**68006**
Trakker I AD720T50P			**2007-12**
F3BE3681B	368	500	
After / Before SCR catalytic converter, 667 mm., Black			**68006**
Trakker I AT 720T42 WT			**2005-12**
F3BE0681V	309	420	
After / Before SCR catalytic converter, 667 mm., Black			**68006**
Trakker I AT190T36W			**2004-12**
F2BE3681A	265	360	
After / Before SCR catalytic converter, 667 mm., Black			**68006**
Trakker I AT190T36WP			**2004-12**
F2BE3681A	265	360	
After / Before SCR catalytic converter, 667 mm., Black			**68006**
Trakker I AT190T41			**2007-12**
F3BE3681D	302	411	
After / Before SCR catalytic converter, 667 mm., Black			**68006**
Trakker I AT190T41W			**2004-12**
F3BE3681D	302	411	
After / Before SCR catalytic converter, 667 mm., Black			**68006**
Trakker I AT260T33			**2004-12**
F2BE3681B	243	330	
After / Before SCR catalytic converter, 667 mm., Black			**68006**
Trakker I AT260T41			**2004-12**
F3BE3681D	302	411	
After / Before SCR catalytic converter, 667 mm., Black			**68006**
Trakker I AT260T41			**2004-12**
F3BE3681D	302	411	
After / Before SCR catalytic converter, 667 mm., Black			**68006**
Trakker I AT260T41P			**2004-07**
F3BE3681D	302	411	
After / Before SCR catalytic converter, 667 mm., Black			**68006**
Trakker I AT260T41P			**2004-07**
F3BE3681D	302	411	
After / Before SCR catalytic converter, 667 mm., Black			**68006**
Trakker I AT260T44			**2004-12**
F3BE0681C, F3BEE681C	324	441	
After / Before SCR catalytic converter, 667 mm., Black			**68006**
Trakker I AT260T44			**2004-07**
F3BE0681C	324	441	
After / Before SCR catalytic converter, 667 mm., Black			**68006**
Trakker I AT260T45			**2004-12**
F3BE3681C	332	451	
After / Before SCR catalytic converter, 667 mm., Black			**68006**
Trakker I AT260T45			**2004-12**
F3BE3681C	332	451	
After / Before SCR catalytic converter, 667 mm., Black			**68006**
Trakker I AT260T45P			**2004-12**
F3BE3681C	332	451	
After / Before SCR catalytic converter, 667 mm., Black			**68006**

IVECO Cont.

Trakker I AT260T45P			**2004-12**
F3BE3681C	332	451	
After / Before SCR catalytic converter, 667 mm., Black			**68006**
Trakker I AT260T50			**2004-12**
F3BE3681B	368	500	
After / Before SCR catalytic converter, 667 mm., Black			**68006**
Trakker I AT260T50			**2004-12**
F3BE3681B	368	500	
After / Before SCR catalytic converter, 667 mm., Black			**68006**
Trakker I AT260T50P			**2004-12**
F3BE3681B	368	500	
After / Before SCR catalytic converter, 667 mm., Black			**68006**
Trakker I AT260T50P			**2004-12**
F3BE3681B	368	500	
After / Before SCR catalytic converter, 667 mm., Black			**68006**
Trakker I AT340T36			**2004-12**
F2BE3681A	265	360	
After / Before SCR catalytic converter, 667 mm., Black			**68006**
Trakker I AT340T36P			**2004-07**
F2BE3681A	265	360	
After / Before SCR catalytic converter, 667 mm., Black			**68006**
Trakker I AT340T36P			**2004-07**
F2BE3681A	265	360	
After / Before SCR catalytic converter, 667 mm., Black			**68006**
Trakker I AT340T41			**2004-12**
F3BE3681D	302	411	
After / Before SCR catalytic converter, 667 mm., Black			**68006**
Trakker I AT340T41P			**2007-12**
F3BE3681D	302	411	
After / Before SCR catalytic converter, 667 mm., Black			**68006**
Trakker I AT340T44P			**2004-07**
F3BE0681C	324	441	
After / Before SCR catalytic converter, 667 mm., Black			**68006**
Trakker I AT340T45			**2004-12**
F3BE3681C	332	451	
After / Before SCR catalytic converter, 667 mm., Black			**68006**
Trakker I AT340T45P			**2004-12**
F3BE3681C	332	451	
After / Before SCR catalytic converter, 667 mm., Black			**68006**
Trakker I AT380T41			**2004-12**
F3BE3681D	302	411	
After / Before SCR catalytic converter, 667 mm., Black			**68006**
Trakker I AT380T41			**2004-12**
F3BE3681D	302	411	
After / Before SCR catalytic converter, 667 mm., Black			**68006**
Trakker I AT380T41P			**2007-12**
F3BE3681D	302	411	
After / Before SCR catalytic converter, 667 mm., Black			**68006**
Trakker I AT380T41P			**2007-12**
F3BE3681D	302	411	
After / Before SCR catalytic converter, 667 mm., Black			**68006**
Trakker I AT380T41W			**2007-12**
F3BE3681D	302	411	
After / Before SCR catalytic converter, 667 mm., Black			**68006**
Trakker I AT380T45			**2004-12**
F3BE3681C	332	451	
After / Before SCR catalytic converter, 667 mm., Black			**68006**
Trakker I AT380T45			**2004-12**
F3BE3681C	332	451	
After / Before SCR catalytic converter, 667 mm., Black			**68006**
Trakker I AT380T45P			**2007-12**
F3BE3681C	332	451	
After / Before SCR catalytic converter, 667 mm., Black			**68006**
Trakker I AT380T45P			**2007-12**
F3BE3681C	332	451	
After / Before SCR catalytic converter, 667 mm., Black			**68006**
Trakker I AT380T45W			**2004-12**
F3BE3681C	332	451	
After / Before SCR catalytic converter, 667 mm., Black			**68006**
Trakker I AT380T45W			**2007-12**
F2BE3681A	265	360	
After / Before SCR catalytic converter, 667 mm., Black			**68006**
Trakker I AT380T50			**2004-12**
F3BE3681B	368	500	
After / Before SCR catalytic converter, 667 mm., Black			**68006**
Trakker I AT380T50			**2004-12**
F3BE3681B	368	500	
After / Before SCR catalytic converter, 667 mm., Black			**68006**
Trakker I AT380T50P			**2007-12**
F3BE3681B	368	500	
After / Before SCR catalytic converter, 667 mm., Black			**68006**
Trakker I AT380T50P			**2007-12**
F3BE3681B	368	500	
After / Before SCR catalytic converter, 667 mm., Black			**68006**

IVECO Cont.

Trakker I AT400T41			**2007-12**
F3BE3681D	302	411	
After / Before SCR catalytic converter, 667 mm., Black			**68006**
Trakker I AT400T41P			**2004-12**
F3BE3681D	302	411	
After / Before SCR catalytic converter, 667 mm., Black			**68006**
Trakker I AT400T45			**2004-12**
F3BE3681C	332	451	
After / Before SCR catalytic converter, 667 mm., Black			**68006**
Trakker I AT400T45P			**2004-12**
F3BE3681C	332	451	
After / Before SCR catalytic converter, 667 mm., Black			**68006**
Trakker I AT400T50			**2007-12**
F3BE3681B	368	500	
After / Before SCR catalytic converter, 667 mm., Black			**68006**
Trakker I AT400T50P			**2004-12**
F3BE3681B	368	500	
After / Before SCR catalytic converter, 667 mm., Black			**68006**
Trakker I AT410T41			**2004-12**
F3BE3681D	302	411	
After / Before SCR catalytic converter, 667 mm., Black			**68006**
Trakker I AT410T45			**2004-12**
F3BE3681C	332	451	
After / Before SCR catalytic converter, 667 mm., Black			**68006**
Trakker I AT410T45P			**2007-12**
F3BE3681C	332	451	
After / Before SCR catalytic converter, 667 mm., Black			**68006**
Trakker I AT410T50			**2004-12**
F3BE3681B	368	500	
After / Before SCR catalytic converter, 667 mm., Black			**68006**
Trakker I AT410T50P			**2007-12**
F3BE3681B	368	500	
After / Before SCR catalytic converter, 667 mm., Black			**68006**
Trakker I AT440T41			**2004-12**
F3BE3681D	302	411	
After / Before SCR catalytic converter, 667 mm., Black			**68006**
Trakker I AT440T41P			**2007-12**
F3BE3681D	302	411	
After / Before SCR catalytic converter, 667 mm., Black			**68006**
Trakker I AT440T45			**2004-12**
F3BE3681C	332	451	
After / Before SCR catalytic converter, 667 mm., Black			**68006**
Trakker I AT440T45P			**2004-12**
F3BE3681C	332	451	
After / Before SCR catalytic converter, 667 mm., Black			**68006**
Trakker I AT440T50P			**2004-12**
F3BE3681B	368	500	
After / Before SCR catalytic converter, 667 mm., Black			**68006**
Trakker I AT720T41			**2007-12**
F3BE3681D	302	411	
After / Before SCR catalytic converter, 667 mm., Black			**68006**
Trakker I AT720T44			**2004-12**
F3BE0681C, F3BEE681C	324	441	
After / Before SCR catalytic converter, 667 mm., Black			**68006**
Trakker I AT720T50			**2004-12**
F3BE3681B	368	500	
After / Before SCR catalytic converter, 667 mm., Black			**68006**
Trakker I AT720T50P			**2007-12**
F3BE3681B	368	500	
After / Before SCR catalytic converter, 667 mm., Black			**68006**
Trakker II AD190T31W			**2012 ->**
F2BE3681C	228	310	
After / Before SCR catalytic converter, 667 mm., Black			**68006**
Trakker II AD190T31W			**2012 ->**
F2CFE611D	228	310	
After / Before SCR catalytic converter, 667 mm., Black			**68006**
Trakker II AD190T31WP			**2012 ->**
F2CFE611D	228	310	
After / Before SCR catalytic converter, 667 mm., Black			**68006**
Trakker II AD190T33			**2012 ->**
F2CFE611C	243	330	
After / Before SCR catalytic converter, 667 mm., Black			**68006**
Trakker II AD190T33W			**2012 ->**
F2CFE611C	243	330	
After / Before SCR catalytic converter, 667 mm., Black			**68006**
Trakker II AD190T33WP			**2012 ->**
F2CFE611C	243	330	
After / Before SCR catalytic converter, 667 mm., Black			**68006**
Trakker II AD190T33WP			**2012 ->**
F2BE3681B	243	330	
After / Before SCR catalytic converter, 667 mm., Black			**68006**
Trakker II AD190T36			**2012 ->**
F2CFE611B	265	360	
After / Before SCR catalytic converter, 667 mm., Black			**68006**

IVECO Cont.			
Trakker II AD190T36W			**2012 ->**
F2BE3681A	265	360	
After / Before SCR catalytic converter, 667 mm., Black			**68006**
Trakker II AD190T36W			**2012 ->**
F2CFE611B	265	360	
After / Before SCR catalytic converter, 667 mm., Black			**68006**
Trakker II AD190T36WP			**2012 ->**
F2BE3681A	265	360	
After / Before SCR catalytic converter, 667 mm., Black			**68006**
Trakker II AD190T36WP			**2012 ->**
F2CFE611B	265	360	
After / Before SCR catalytic converter, 667 mm., Black			**68006**
Trakker II AD190T41			**2012 ->**
F3BE3681D, F3HFE611D	302	411	
After / Before SCR catalytic converter, 667 mm., Black			**68006**
Trakker II AD190T41W			**2012 ->**
F3BE3681D, F3HFE611D	302	411	
After / Before SCR catalytic converter, 667 mm., Black			**68006**
Trakker II AD190T41WP			**2012 ->**
F3HFE611D	302	411	
After / Before SCR catalytic converter, 667 mm., Black			**68006**
Trakker II AD190T45			**2012 ->**
F3BE3681C	332	451	
After / Before SCR catalytic converter, 667 mm., Black			**68006**
Trakker II AD190T45			**2012 ->**
F3HFE611C	331	450	
After / Before SCR catalytic converter, 667 mm., Black			**68006**
Trakker II AD190T45W			**2012 ->**
F3BE3681C	332	451	
After / Before SCR catalytic converter, 667 mm., Black			**68006**
Trakker II AD190T45W			**2012 ->**
F3HFE611C	331	450	
After / Before SCR catalytic converter, 667 mm., Black			**68006**
Trakker II AD190T45WP			**2012 ->**
F3BE3681C	332	451	
After / Before SCR catalytic converter, 667 mm., Black			**68006**
Trakker II AD190T45WP			**2012 ->**
F3HFE611C	331	450	
After / Before SCR catalytic converter, 667 mm., Black			**68006**
Trakker II AD260T33			**2012 ->**
F2CFE611C	243	330	
After / Before SCR catalytic converter, 667 mm., Black			**68006**
Trakker II AD260T33			**2012 ->**
F2BE3681B	243	330	
After / Before SCR catalytic converter, 667 mm., Black			**68006**
Trakker II AD260T33			**2012 ->**
F2CFE611C	243	330	
After / Before SCR catalytic converter, 667 mm., Black			**68006**
Trakker II AD260T33			**2012 ->**
F2BE3681B	243	330	
After / Before SCR catalytic converter, 667 mm., Black			**68006**
Trakker II AD260T36			**2012 ->**
F2BE3681A	265	360	
After / Before SCR catalytic converter, 667 mm., Black			**68006**
Trakker II AD260T36			**2012 ->**
F2CFE611B	265	360	
After / Before SCR catalytic converter, 667 mm., Black			**68006**
Trakker II AD260T36			**2012 ->**
F2CFE611B	265	360	
After / Before SCR catalytic converter, 667 mm., Black			**68006**
Trakker II AD260T36			**2012 ->**
F2BE3681A	265	360	
After / Before SCR catalytic converter, 667 mm., Black			**68006**
Trakker II AD260T36W			**2012 ->**
F2CFE611B	265	360	
After / Before SCR catalytic converter, 667 mm., Black			**68006**
Trakker II AD260T41			**2012 ->**
F3BE3681D, F3HFE611D	302	411	
After / Before SCR catalytic converter, 667 mm., Black			**68006**
Trakker II AD260T41P			**2012 ->**
F3BE3681D, F3HFE611D	302	411	
After / Before SCR catalytic converter, 667 mm., Black			**68006**
Trakker II AD260T41W			**2012 ->**
F3BE3681D, F3HFE611D	302	411	
After / Before SCR catalytic converter, 667 mm., Black			**68006**
Trakker II AD260T45			**2012 ->**
F3BE3681C	332	451	
After / Before SCR catalytic converter, 667 mm., Black			**68006**
Trakker II AD260T45			**2012 ->**
F3HFE611C	331	450	
After / Before SCR catalytic converter, 667 mm., Black			**68006**
Trakker II AD260T45P			**2012 ->**
F3HFE611C	331	450	
After / Before SCR catalytic converter, 667 mm., Black			**68006**

FAE

IVECO Cont.			
Trakker II AD260T45P			**2012 ->**
F3BE3681C	332	451	
After / Before SCR catalytic converter, 667 mm., Black			**68006**
Trakker II AD260T45W			**2012 ->**
F3HFE611C	331	450	
After / Before SCR catalytic converter, 667 mm., Black			**68006**
Trakker II AD260T45W			**2012 ->**
F3BE3681C	332	451	
After / Before SCR catalytic converter, 667 mm., Black			**68006**
Trakker II AD260T50			**2012 ->**
F3BE3681B, F3HFE611B	368	500	
After / Before SCR catalytic converter, 667 mm., Black			**68006**
Trakker II AD260T50P			**2012 ->**
F3HFE611B	368	500	
After / Before SCR catalytic converter, 667 mm., Black			**68006**
Trakker II AD340T36			**2012 ->**
F2CFE611B	265	360	
After / Before SCR catalytic converter, 667 mm., Black			**68006**
Trakker II AD340T36			**2012 ->**
F2CFE611B	265	360	
After / Before SCR catalytic converter, 667 mm., Black			**68006**
Trakker II AD340T36			**2012 ->**
F2BE3681A	265	360	
After / Before SCR catalytic converter, 667 mm., Black			**68006**
Trakker II AD340T36			**2012 ->**
F2BE3681A	265	360	
After / Before SCR catalytic converter, 667 mm., Black			**68006**
Trakker II AD340T36P			**2012 ->**
F2CFE611B	265	360	
After / Before SCR catalytic converter, 667 mm., Black			**68006**
Trakker II AD340T41			**2012 ->**
F3BE3681D, F3HFE611D	302	411	
After / Before SCR catalytic converter, 667 mm., Black			**68006**
Trakker II AD340T41			**2012 ->**
F3BE3681D, F3HFE611D	302	411	
After / Before SCR catalytic converter, 667 mm., Black			**68006**
Trakker II AD340T41P			**2012 ->**
F3BE3681D, F3HFE611D	302	411	
After / Before SCR catalytic converter, 667 mm., Black			**68006**
Trakker II AD340T41P			**2012 ->**
F3BE3681D, F3HFE611D	302	411	
After / Before SCR catalytic converter, 667 mm., Black			**68006**
Trakker II AD340T45			**2012 ->**
F3HFE611C	331	450	
After / Before SCR catalytic converter, 667 mm., Black			**68006**
Trakker II AD340T45			**2012 ->**
F3HFE611C	331	450	
After / Before SCR catalytic converter, 667 mm., Black			**68006**
Trakker II AD340T45			**2012 ->**
F3BE3681C	332	451	
After / Before SCR catalytic converter, 667 mm., Black			**68006**
Trakker II AD340T45			**2012 ->**
F3BE3681C	332	451	
After / Before SCR catalytic converter, 667 mm., Black			**68006**
Trakker II AD340T45P			**2012 ->**
F3HFE611C	331	450	
After / Before SCR catalytic converter, 667 mm., Black			**68006**
Trakker II AD340T45P			**2012 ->**
F3BE3681C	332	451	
After / Before SCR catalytic converter, 667 mm., Black			**68006**
Trakker II AD380T36			**2012 ->**
F2BE3681A	265	360	
After / Before SCR catalytic converter, 667 mm., Black			**68006**
Trakker II AD380T36			**2012 ->**
F2CFE611B	265	360	
After / Before SCR catalytic converter, 667 mm., Black			**68006**
Trakker II AD380T41			**2012 ->**
F3BE3681D, F3HFE611D	302	411	
After / Before SCR catalytic converter, 667 mm., Black			**68006**
Trakker II AD380T41			**2012 ->**
F3BE3681D, F3HFE611D	302	411	
After / Before SCR catalytic converter, 667 mm., Black			**68006**
Trakker II AD380T41P			**2012 ->**
F3BE3681D, F3HFE611D	302	411	
After / Before SCR catalytic converter, 667 mm., Black			**68006**
Trakker II AD380T41W			**2012 ->**
F3BE3681D, F3HFE611D	302	411	
After / Before SCR catalytic converter, 667 mm., Black			**68006**
Trakker II AD380T45			**2012 ->**
F3BE3681C	332	451	
After / Before SCR catalytic converter, 667 mm., Black			**68006**
Trakker II AD380T45			**2012 ->**
F3HFE611C	331	450	
After / Before SCR catalytic converter, 667 mm., Black			**68006**

IVECO Cont.

Trakker II AD380T45P			**2012 ->**
F3BE3681C	332	451	
After / Before SCR catalytic converter, 667 mm., Black			**68006**
Trakker II AD380T45P			**2012 ->**
F3HFE611C	331	450	
After / Before SCR catalytic converter, 667 mm., Black			**68006**
Trakker II AD380T45W			**2012 ->**
F3BE3681C	332	451	
After / Before SCR catalytic converter, 667 mm., Black			**68006**
Trakker II AD380T45W			**2012 ->**
F3HFE611C	331	450	
After / Before SCR catalytic converter, 667 mm., Black			**68006**
Trakker II AD380T50			**2012 ->**
F3BE3681B, F3HFE611B	368	500	
After / Before SCR catalytic converter, 667 mm., Black			**68006**
Trakker II AD380T50P			**2012 ->**
F3BE3681B, F3HFE611B	368	500	
After / Before SCR catalytic converter, 667 mm., Black			**68006**
Trakker II AD400T36			**2012 ->**
F2BE3681A	265	360	
After / Before SCR catalytic converter, 667 mm., Black			**68006**
Trakker II AD400T36			**2012 ->**
F2CFE611B	265	360	
After / Before SCR catalytic converter, 667 mm., Black			**68006**
Trakker II AD400T41			**2012 ->**
F3HFE611D	302	411	
After / Before SCR catalytic converter, 667 mm., Black			**68006**
Trakker II AD400T41P			**2012 ->**
F3BE3681D, F3HFE611D	302	411	
After / Before SCR catalytic converter, 667 mm., Black			**68006**
Trakker II AD400T41W			**2012 ->**
F3BE3681D, F3HFE611D	302	411	
After / Before SCR catalytic converter, 667 mm., Black			**68006**
Trakker II AD400T41WP			**2012 ->**
F3HFE611D	302	411	
After / Before SCR catalytic converter, 667 mm., Black			**68006**
Trakker II AD400T45			**2012 ->**
F3BE3681C	332	451	
After / Before SCR catalytic converter, 667 mm., Black			**68006**
Trakker II AD400T45			**2012 ->**
F3HFE611C	331	450	
After / Before SCR catalytic converter, 667 mm., Black			**68006**
Trakker II AD400T45P			**2012 ->**
F3BE3681C	332	451	
After / Before SCR catalytic converter, 667 mm., Black			**68006**
Trakker II AD400T45P			**2012 ->**
F3HFE611C	331	450	
After / Before SCR catalytic converter, 667 mm., Black			**68006**
Trakker II AD400T45W			**2012 ->**
F3HFE611C	331	450	
After / Before SCR catalytic converter, 667 mm., Black			**68006**
Trakker II AD400T45W			**2012 ->**
F3BE3681C	332	451	
After / Before SCR catalytic converter, 667 mm., Black			**68006**
Trakker II AD400T45WP			**2012 ->**
F3HFE611C	331	450	
After / Before SCR catalytic converter, 667 mm., Black			**68006**
Trakker II AD400T50			**2012 ->**
F3BE3681B, F3HFE611B	368	500	
After / Before SCR catalytic converter, 667 mm., Black			**68006**
Trakker II AD400T50P			**2012 ->**
F3HFE611B	368	500	
After / Before SCR catalytic converter, 667 mm., Black			**68006**
Trakker II AD410T36			**2012 ->**
F2CFE611B	265	360	
After / Before SCR catalytic converter, 667 mm., Black			**68006**
Trakker II AD410T41			**2012 ->**
F3BE3681D, F3HFE611D	302	411	
After / Before SCR catalytic converter, 667 mm., Black			**68006**
Trakker II AD410T41			**2012 ->**
F3BE3681D, F3HFE611D	302	411	
After / Before SCR catalytic converter, 667 mm., Black			**68006**
Trakker II AD410T41P			**2012 ->**
F3BE3681D, F3HFE611D	302	411	
After / Before SCR catalytic converter, 667 mm., Black			**68006**
Trakker II AD410T45			**2012 ->**
F3HFE611C	331	450	
After / Before SCR catalytic converter, 667 mm., Black			**68006**
Trakker II AD410T45			**2012 ->**
F3HFE611C	331	450	
After / Before SCR catalytic converter, 667 mm., Black			**68006**
Trakker II AD410T45			**2012 ->**
F3BE3681C	332	451	
After / Before SCR catalytic converter, 667 mm., Black			**68006**

IVECO Cont.

Trakker II AD410T45P			**2012 ->**
F3HFE611C	331	450	
After / Before SCR catalytic converter, 667 mm., Black			**68006**
Trakker II AD410T45P			**2012 ->**
F3BE3681C	332	451	
After / Before SCR catalytic converter, 667 mm., Black			**68006**
Trakker II AD410T45W			**2012 ->**
F3HFE611C	331	450	
After / Before SCR catalytic converter, 667 mm., Black			**68006**
Trakker II AD410T45W			**2012 ->**
F3BE3681C	332	451	
After / Before SCR catalytic converter, 667 mm., Black			**68006**
Trakker II AD410T50			**2012 ->**
F3BE3681B, F3HFE611B	368	500	
After / Before SCR catalytic converter, 667 mm., Black			**68006**
Trakker II AD410T50P			**2012 ->**
F3BE3681B, F3HFE611B	368	500	
After / Before SCR catalytic converter, 667 mm., Black			**68006**
Trakker II AD440T41			**2012 ->**
F3HFE611D	302	411	
After / Before SCR catalytic converter, 667 mm., Black			**68006**
Trakker II AD440T41P			**2012 ->**
F3BE3681D, F3HFE611D	302	411	
After / Before SCR catalytic converter, 667 mm., Black			**68006**
Trakker II AD440T45			**2012 ->**
F3BE3681C	332	451	
After / Before SCR catalytic converter, 667 mm., Black			**68006**
Trakker II AD440T45			**2012 ->**
F3HFE611C	331	450	
After / Before SCR catalytic converter, 667 mm., Black			**68006**
Trakker II AD440T45P			**2012 ->**
F3HFE611C	331	450	
After / Before SCR catalytic converter, 667 mm., Black			**68006**
Trakker II AD440T45P			**2012 ->**
F3BE3681C	332	451	
After / Before SCR catalytic converter, 667 mm., Black			**68006**
Trakker II AD440T50			**2012 ->**
F3BE3681B, F3HFE611B	368	500	
After / Before SCR catalytic converter, 667 mm., Black			**68006**
Trakker II AD440T50P			**2012 ->**
F3HFE611B	368	500	
After / Before SCR catalytic converter, 667 mm., Black			**68006**
Trakker II AD720T41			**2012 ->**
F3BE3681D, F3HFE611D	302	411	
After / Before SCR catalytic converter, 667 mm., Black			**68006**
Trakker II AD720T41P			**2012 ->**
F3HFE611D	302	411	
After / Before SCR catalytic converter, 667 mm., Black			**68006**
Trakker II AD720T41W			**2012 ->**
F3BE3681D, F3HFE611D	302	411	
After / Before SCR catalytic converter, 667 mm., Black			**68006**
Trakker II AD720T44			**2012 ->**
F3BEE681C	324	441	
After / Before SCR catalytic converter, 667 mm., Black			**68006**
Trakker II AD720T50			**2012 ->**
F3BE3681B, F3HFE611B	368	500	
After / Before SCR catalytic converter, 667 mm., Black			**68006**
Trakker II AD720T50P			**2012 ->**
F3BE3681B, F3HFE611B	368	500	
After / Before SCR catalytic converter, 667 mm., Black			**68006**
Trakker II AT190T31W			**2012 ->**
F2CFE611D	228	310	
After / Before SCR catalytic converter, 667 mm., Black			**68006**
Trakker II AT190T33			**2012 ->**
F2CFE611C	243	330	
After / Before SCR catalytic converter, 667 mm., Black			**68006**
Trakker II AT190T36			**2012 ->**
F2CFE611B	265	360	
After / Before SCR catalytic converter, 667 mm., Black			**68006**
Trakker II AT190T36W			**2012 ->**
F2BE3681A	265	360	
After / Before SCR catalytic converter, 667 mm., Black			**68006**
Trakker II AT190T36W			**2012 ->**
F2CFE611B	265	360	
After / Before SCR catalytic converter, 667 mm., Black			**68006**
Trakker II AT190T36WP			**2012 ->**
F2CFE611B	265	360	
After / Before SCR catalytic converter, 667 mm., Black			**68006**
Trakker II AT190T41			**2012 ->**
F3BE3681D, F3HFE611D	302	411	
After / Before SCR catalytic converter, 667 mm., Black			**68006**
Trakker II AT190T41W			**2012 ->**
F3BE3681D, F3HFE611D	302	411	
After / Before SCR catalytic converter, 667 mm., Black			**68006**

IVECO Cont.			
Trakker II AT190T45			**2012 ->**
F3HFE611C	331	450	
After / Before SCR catalytic converter, 667 mm., Black			**68006**
Trakker II AT190T45W			**2012 ->**
F3HFE611C	331	450	
After / Before SCR catalytic converter, 667 mm., Black			**68006**
Trakker II AT190T45W			**2012 ->**
F3BE3681C	332	451	
After / Before SCR catalytic converter, 667 mm., Black			**68006**
Trakker II AT190T45WP			**2012 ->**
F3HFE611C	331	450	
After / Before SCR catalytic converter, 667 mm., Black			**68006**
Trakker II AT260T33			**2012 ->**
F2CFE611C	243	330	
After / Before SCR catalytic converter, 667 mm., Black			**68006**
Trakker II AT260T36			**2012 ->**
F2BE3681A	265	360	
After / Before SCR catalytic converter, 667 mm., Black			**68006**
Trakker II AT260T36			**2012 ->**
F2CFE611B	265	360	
After / Before SCR catalytic converter, 667 mm., Black			**68006**
Trakker II AT260T41			**2012 ->**
F3BE3681D, F3HFE611D	302	411	
After / Before SCR catalytic converter, 667 mm., Black			**68006**
Trakker II AT260T41P			**2012 ->**
F3BE3681D, F3HFE611D	302	411	
After / Before SCR catalytic converter, 667 mm., Black			**68006**
Trakker II AT260T41W			**2012 ->**
F3BE3681D, F3HFE611D	302	411	
After / Before SCR catalytic converter, 667 mm., Black			**68006**
Trakker II AT260T44			**2012 ->**
F3BEE681C	324	441	
After / Before SCR catalytic converter, 667 mm., Black			**68006**
Trakker II AT260T45			**2012 ->**
F3BE3681C	332	451	
After / Before SCR catalytic converter, 667 mm., Black			**68006**
Trakker II AT260T45			**2012 ->**
F3HFE611C	331	450	
After / Before SCR catalytic converter, 667 mm., Black			**68006**
Trakker II AT260T45P			**2012 ->**
F3HFE611C	331	450	
After / Before SCR catalytic converter, 667 mm., Black			**68006**
Trakker II AT260T45P			**2012 ->**
F3BE3681C	332	451	
After / Before SCR catalytic converter, 667 mm., Black			**68006**
Trakker II AT260T45W			**2012 ->**
F3HFE611C	331	450	
After / Before SCR catalytic converter, 667 mm., Black			**68006**
Trakker II AT260T45W			**2012 ->**
F3BE3681C	332	451	
After / Before SCR catalytic converter, 667 mm., Black			**68006**
Trakker II AT260T50			**2012 ->**
F3BE3681B, F3HFE611B	368	500	
After / Before SCR catalytic converter, 667 mm., Black			**68006**
Trakker II AT260T50P			**2012 ->**
F3BE3681B, F3HFE611B	368	500	
After / Before SCR catalytic converter, 667 mm., Black			**68006**
Trakker II AT340T36			**2012 ->**
F2CFE611B	265	360	
After / Before SCR catalytic converter, 667 mm., Black			**68006**
Trakker II AT340T36			**2012 ->**
F2BE3681A	265	360	
After / Before SCR catalytic converter, 667 mm., Black			**68006**
Trakker II AT340T41			**2012 ->**
F3BE3681D, F3HFE611D	302	411	
After / Before SCR catalytic converter, 667 mm., Black			**68006**
Trakker II AT340T41P			**2012 ->**
F3HFE611D	302	411	
After / Before SCR catalytic converter, 667 mm., Black			**68006**
Trakker II AT340T45			**2012 ->**
F3BE3681C	332	451	
After / Before SCR catalytic converter, 667 mm., Black			**68006**
Trakker II AT340T45			**2012 ->**
F3HFE611C	331	450	
After / Before SCR catalytic converter, 667 mm., Black			**68006**
Trakker II AT340T45P			**2012 ->**
F3HFE611C	331	450	
After / Before SCR catalytic converter, 667 mm., Black			**68006**
Trakker II AT380T41			**2012 ->**
F3BE3681D, F3HFE611D	302	411	
After / Before SCR catalytic converter, 667 mm., Black			**68006**
Trakker II AT380T41P			**2012 ->**
F3BE3681D, F3HFE611D	302	411	
After / Before SCR catalytic converter, 667 mm., Black			**68006**

FAE

IVECO Cont.			
Trakker II AT380T45			**2012 ->**
F3BE3681C	332	451	
After / Before SCR catalytic converter, 667 mm., Black			**68006**
Trakker II AT380T45			**2012 ->**
F3HFE611C	331	450	
After / Before SCR catalytic converter, 667 mm., Black			**68006**
Trakker II AT380T45P			**2012 ->**
F3BE3681C	332	451	
After / Before SCR catalytic converter, 667 mm., Black			**68006**
Trakker II AT380T45P			**2012 ->**
F3HFE611C	331	450	
After / Before SCR catalytic converter, 667 mm., Black			**68006**
Trakker II AT380T45W			**2012 ->**
F3BE3681C	332	451	
After / Before SCR catalytic converter, 667 mm., Black			**68006**
Trakker II AT380T45W			**2012 ->**
F3HFE611C	331	450	
After / Before SCR catalytic converter, 667 mm., Black			**68006**
Trakker II AT380T50			**2012 ->**
F3BE3681B, F3HFE611B	368	500	
After / Before SCR catalytic converter, 667 mm., Black			**68006**
Trakker II AT380T50P			**2012 ->**
F3BE3681B, F3HFE611B	368	500	
After / Before SCR catalytic converter, 667 mm., Black			**68006**
Trakker II AT400T41			**2012 ->**
F3BE3681D, F3HFE611D	302	411	
After / Before SCR catalytic converter, 667 mm., Black			**68006**
Trakker II AT400T41P			**2012 ->**
F3HFE611D	302	411	
After / Before SCR catalytic converter, 667 mm., Black			**68006**
Trakker II AT400T41W			**2012 ->**
F3HFE611D	302	411	
After / Before SCR catalytic converter, 667 mm., Black			**68006**
Trakker II AT400T41WP			**2012 ->**
F3HFE611D	302	411	
After / Before SCR catalytic converter, 667 mm., Black			**68006**
Trakker II AT400T45			**2012 ->**
F3HFE611C	331	450	
After / Before SCR catalytic converter, 667 mm., Black			**68006**
Trakker II AT400T45P			**2012 ->**
F3BE3681C	332	451	
After / Before SCR catalytic converter, 667 mm., Black			**68006**
Trakker II AT400T45P			**2012 ->**
F3HFE611C	331	450	
After / Before SCR catalytic converter, 667 mm., Black			**68006**
Trakker II AT400T45W			**2012 ->**
F3HFE611C	331	450	
After / Before SCR catalytic converter, 667 mm., Black			**68006**
Trakker II AT400T45W			**2012 ->**
F3BE3681C	332	451	
After / Before SCR catalytic converter, 667 mm., Black			**68006**
Trakker II AT400T45WP			**2012 ->**
F3HFE611C	331	450	
After / Before SCR catalytic converter, 667 mm., Black			**68006**
Trakker II AT400T50			**2012 ->**
F3HFE611B	368	500	
After / Before SCR catalytic converter, 667 mm., Black			**68006**
Trakker II AT400T50P			**2012 ->**
F3BE3681B, F3HFE611B	368	500	
After / Before SCR catalytic converter, 667 mm., Black			**68006**
Trakker II AT410T36			**2012 ->**
F2CFE611B	265	360	
After / Before SCR catalytic converter, 667 mm., Black			**68006**
Trakker II AT410T41			**2012 ->**
F3BE3681D, F3HFE611D	302	411	
After / Before SCR catalytic converter, 667 mm., Black			**68006**
Trakker II AT410T45			**2012 ->**
F3BE3681C	332	451	
After / Before SCR catalytic converter, 667 mm., Black			**68006**
Trakker II AT410T45			**2012 ->**
F3HFE611C	331	450	
After / Before SCR catalytic converter, 667 mm., Black			**68006**
Trakker II AT410T45P			**2012 ->**
F3HFE611C	331	450	
After / Before SCR catalytic converter, 667 mm., Black			**68006**
Trakker II AT410T45P			**2012 ->**
F3BE3681C	332	451	
After / Before SCR catalytic converter, 667 mm., Black			**68006**
Trakker II AT410T50			**2012 ->**
F3BE3681B, F3HFE611B	368	500	
After / Before SCR catalytic converter, 667 mm., Black			**68006**
Trakker II AT410T50P			**2012 ->**
F3BE3681B, F3HFE611B	368	500	
After / Before SCR catalytic converter, 667 mm., Black			**68006**

IVECO Cont.

Trakker II AT440T41		**2012 ->**
F3HFE611D	302	411
After / Before SCR catalytic converter, 667 mm., Black		**68006**
Trakker II AT440T41P		**2012 ->**
F3HFE611D	302	411
After / Before SCR catalytic converter, 667 mm., Black		**68006**
Trakker II AT440T45		**2012 ->**
F3BE3681C	332	451
After / Before SCR catalytic converter, 667 mm., Black		**68006**
Trakker II AT440T45		**2012 ->**
F3HFE611C	331	450
After / Before SCR catalytic converter, 667 mm., Black		**68006**
Trakker II AT440T45P		**2012 ->**
F3HFE611C	331	450
After / Before SCR catalytic converter, 667 mm., Black		**68006**
Trakker II AT440T45P		**2012 ->**
F3BE3681C	332	451
After / Before SCR catalytic converter, 667 mm., Black		**68006**
Trakker II AT440T50		**2012 ->**
F3HFE611B	368	500
After / Before SCR catalytic converter, 667 mm., Black		**68006**
Trakker II AT440T50P		**2012 ->**
F3HFE611B	368	500
After / Before SCR catalytic converter, 667 mm., Black		**68006**
Trakker II AT720T41		**2012 ->**
F3BE3681D, F3HFE611D	302	411
After / Before SCR catalytic converter, 667 mm., Black		**68006**
Trakker II AT720T41P		**2012 ->**
F3HFE611D	302	411
After / Before SCR catalytic converter, 667 mm., Black		**68006**
Trakker II AT720T41W		**2012 ->**
F3HFE611D	302	411
After / Before SCR catalytic converter, 667 mm., Black		**68006**
Trakker II AT720T42W		**2012 ->**
F3BEE681V	309	420
After / Before SCR catalytic converter, 667 mm., Black		**68006**
Trakker II AT720T44		**2012 ->**
F3BEE681C	324	441
After / Before SCR catalytic converter, 667 mm., Black		**68006**
Trakker II AT720T44W		**2012 ->**
F3BEE681C	324	441
After / Before SCR catalytic converter, 667 mm., Black		**68006**
Trakker II AT720T50		**2012 ->**
F3BE3681B, F3HFE611B	368	500
After / Before SCR catalytic converter, 667 mm., Black		**68006**
Trakker II AT720T50P		**2012 ->**
F3BE3681B, F3HFE611B	368	500
After / Before SCR catalytic converter, 667 mm., Black		**68006**
Urbanway URBANWAY 10m, 12m		**2013 ->**
------	210	286
After / Before SCR catalytic converter, 667 mm., Black		**68006**
UrbanWay URBANWAY 12m CNG		**2013 ->**
------	213	290
After / Before SCR catalytic converter, 667 mm., Black		**68006**
UrbanWay URBANWAY 18m CNG		**2013 ->**
------	242	330
After / Before SCR catalytic converter, 667 mm., Black		**68006**

NOTES
NOTAS
REMARQUES

FAE

OEM-IAM

CROSS REFERENCES
CRUCE DE REFERENCIAS
TABLEAU DES EQUIVALENCES

ALFA ROMEO	FAE
See also	
Ver también	
Voir aussi	
CHRYSLER	
FIAT	
JEEP	
LANCIA	
51790443	68038
51799538	68080
51825680	68080
55204765	68061
55207978	68038
55210402	68080
55218471	68080
55257688	68075
55271711	68075

AT AUTOTEILE	FAE
at10738	68094
at10741	68043
at10742	68053
at10743	68018
at10744	68039
at10745	68031
at10747	68012
at10748	68050
at10749	68043
at10751	68027
at10752	68029
at10756	68029
at10756	68034
at10922	68041
at10925	68060
at10928	68093
at10948	68035
at10950	68036
at10957	68089
at10960	68097
at10962	68033
at10965	68083
at10968	68079
at10972	68083
at10973	68033
at10976	68092
at10988	68049
at10990	68063
at10991	68056
at10992	68058
at10993	68064
at10994	68062
at11001	68076
at11003	68042
at11013	68045
at11014	68057
at11015	68028
at11029	68092
at11036	68051
at11037	68046
at11038	68012
at11039	68052
at11041	68054
at11043	68040
at11054	68096
at11056	68123
at11060	68069
at11062	68088
at11063	68047
at11064	68091
at11068	68038
at11081	68067
at11089	68044
at11092	68081
at11094	68086
at11100	68081
at11102	68038
at11103	68074
at11106	68080
at11107	68073

AT AUTO. Cont.	FAE
at11112	68061

AUDI	FAE
See also	
Ver también	
Voir aussi	
PORSCHE	
SEAT	
SKODA	
VOLKSWAGEN	
03G 906 088 A	68001
03G 906 088 AA	68090
03G 906 088 AF	68024
03G 906 088 AG	68079
03G 906 088 AM	68001
03G 906 088 AN	68001
03G 906 088 AT	68001
03G 906 088 BA	68079
03G 906 088 D	68005
03G 906 088 J	68001
03G 906 088 K	68011
03L 906 088 AA	68021
03L 906 088 AB	68092
03L 906 088 AJ	68002
03L 906 088 AK	68003
03L 906 088 BS	68001
03L 906 088 CC	68003
03L 906 088 CH	68035
03L 906 088 DE	68021
03L 906 088 E	68033
03L 906 088 FG	68036
03L 906 088 GR	68021
03L 906 088 HE	68021
03L 906 088 HL	68024
03L 906 088 J	68002
03L 906 088 M	68003
03L 906 088 N	68002
03L 906 088 P	68036
04L 906 088	68007
04L 906 088 AE	68007
04L 906 088 B	68014
04L 906 088 BD	68019
04L 906 088 CK	68093
04L 906 088 CP	68030
04L 906 088 DA	68013
04L 906 088 DH	68078
04L 906 088 DQ	68007
04L 906 088 DR	68093
04L 906 088 E	68017
04L 906 088 HT	68007
04L 906 088 K	68048
057 906 088 J	68068
058 906 088 AE	68025
059 906 088 A	68097
059 906 088 AE	68025
059 906 088 BJ	68084
059 906 088 BK	68083
059 906 088 CL	68084
059 906 088 M	68083
07Z 906 088 A	68068
4F0 906 088	68090
4H0 906 088 AB	68033
4M0 906 088 AL	68092
4M0 906 088 N	68092
8E0 906 088	68089

AUTLOG	FAE
AS3011	68001
AS3012	68097
AS3016	68047
AS3017	68091
AS3018	68046
AS3019	68015
AS3019	68029
AS3020	68050
AS3021	68028
AS3022	68092
AS3044	68036

AUTLOG Cont.	FAE
AS3045	68053
AS3046	68031
AS3047	68052
AS3049	68016
AS3050	68049
AS3051	68011
AS3052	68002
AS3052	68030
AS3054	68003
AS3055	68045
AS3059	68033
AS3060	68058
AS3061	68017
AS3063	68039
AS3065	68005
AS3072	68084
AS3073	68002
AS3078	68068
AS3080	68027
AS3081	68043
AS3086	68007
AS3091	68096
AS3097	68083
AS3101	68080
AS3103	68088
AS3104	68069
AS3105	68062
AS3108	68123
AS3121	68051
AS3124	68018
AS3124	68022
AS3126	68012
AS3130	68057
AS3133	68026
AS3137	68042
AS3138	68036
AS3139	68063
AS3142	68035
AS3150	68016
AS3156	68025
AS3159	68083
AS3162	68079
AS3172	68002
AS3174	68014
AS3176	68033
AS3178	68013
AS3179	68040
AS3183	68089
AS3185	68093
AS3188	68021
AS3202	68034
AS3209	68038
AS3212	68048
AS3220	68012
AS3221	68054
AS3230	68076
AS3235	68038
AS3240	68061
AS3256	68086
AS3257	68081
AS3258	68081
AS3259	68073
AS3260	68074
AS3261	68080
AS3272	68060
AS3296	68082
AS3320	68092
AS3339	68044
AS3346	68094
AS3352	68092
AS3355	68023
AS3356	68041
AS3357	68077
AS3359	68004
AS3361	68080
AS3371	68067
AS3383	68056
AS3385	68064

AUTLOG Cont.	FAE
AS3391	68090
AS3402	68037
AS3403	68075

BBT	FAE
ATS0300	68003
ATS0301	68002
ATS0302	68005
ATS0303	68026
ATS0304	68097
ATS0306	68011
ATS0306	68016
ATS0307	68092
ATS0309	68014
ATS0313	68084
ATS0314	68035
ATS0317	68028
ATS0318	68083
ATS0319	68068
ATS0320	68058
ATS0321	68079
ATS0323	68049
ATS0325	68024
ATS0327	68001
ATS0329	68056
ATS0330	68007
ATS0331	68036
ATS0332	68064
ATS0333	68036
ATS0400	68022
ATS0401	68015
ATS0402	68094
ATS0404	68031
ATS0405	68040
ATS0407	68012
ATS0408	68029
ATS0411	68034
ATS0412	68029
ATS0413	68039
ATS0414	68027
ATS0415	68043
ATS0416	68012
ATS0417	68094
ATS0419	68018
ATS0420	68041
ATS0700	68069
ATS1300	68080
ATS4019	68018

BOSCH	FAE
0 986 259 003	68096
0 986 259 005	68043
0 986 259 009	68123
0 986 259 010	68080
0 986 259 012	68027
0 986 259 013	68029
0 986 259 015	68002
0 986 259 017	68097
0 986 259 019	68033
0 986 259 020	68007
0 986 259 021	68047
0 986 259 025	68015
0 986 259 026	68046
0 986 259 028	68057
0 986 259 030	68045
0 986 259 031	68028
0 986 259 036	68093
0 986 259 038	68053
0 986 259 039	68012
0 986 259 040	68050
0 986 259 042	68084
0 986 259 043	68002
0 986 259 045	68058
0 986 259 046	68048
0 986 259 049	68040
0 986 259 053	68052
0 986 259 056	68034
0 986 259 057	68063

BOSCH Cont.	FAE
0 986 259 058	68064
0 986 259 060	68056
0 986 259 061	68041
0 986 259 063	68001
0 986 259 064	68003
0 986 259 066	68017
0 986 259 067	68036
0 986 259 068	68005
0 986 259 069	68014
0 986 259 070	68016
0 986 259 071	68069
0 986 259 072	68011
0 986 259 073	68013
0 986 259 074	68088
0 986 259 075	68026
0 986 259 076	68062
0 986 259 077	68035
0 986 259 078	68039
0 986 259 079	68012
0 986 259 080	68019
0 986 259 082	68061
0 986 259 085	68068
0 986 259 086	68031
0 986 259 087	68049
0 986 259 096	68077
0 986 259 104	68036
0 986 259 105	68059
0 986 259 114	68024
0 986 259 123	68078
0 986 259 134	68082
0 986 259 135	68082
0 986 259 138	68015
0 986 259 139	68073
0 986 259 140	68060
0 986 259 147	68074
0 986 259 148	68006

B. ELECTRICFIL	FAE
1473102	68037
1473106	68073
1473111	68024
1473205	68012
1473206	68012
1473209	68046
1473211	68084
1473218	68041
1473223	68041
1473232	68092
1473903	68047
1473904	68016
1473905	68088
1473906	68005
1473907	68028
1473908	68011
1473909	68049
1473912	68058
1473913	68064
1473914	68063
1473916	68056
1473919	68091
1473922	68123
1473923	68079
1473924	68043
1473926	68096
1473927	68001
1473929	68003
1473930	68035
1473932	68057
1473934	68043
1473935	68036
1473936	68036
1473937	68017
1473938	68014
1473940	68002
1473941	68007
1473944	68002
1473949	68033
1473951	68027

B. ELECTRI. Cont.	FAE
1473952	68069
1473953	68061
1473957	68080
1473958	68059
1473959	68019
1473964	68059
1473965	68078
1473969	68075
1473970	68002
1473971	68093
1473974	68048
1473975	68013
1473977	68047
1473978	68018
1473979	68029
1473980	68031
1473981	68026
1473983	68045
1473998	68052

BUGIAD	FAE
BES18101	68091
BES18102	68046
BES18104	68017
BES18106	68088
BES18107	68026
BES18109	68001
BES18110	68007
BES18111	68042
BES18114	68050
BES18115	68036
BES18116	68096
BES18117	68043
BES18125	68076
BES18129	68022
BES18130	68031
BES18131	68080
BES18132	68097
BES18133	68011
BES18133	68016
BES18135	68002

CASE IH	FAE
See also	
Ver también	
Voir aussi	
IVECO	
5801291815	68006

CHEVROLET	FAE
See also	
Ver también	
Voir aussi	
OPEL	
SAAB	
0855432	68096
55566185	68091
55574183	68096
855432	68096

CHRYSLER	FAE
See also	
Ver también	
Voir aussi	
ALFA ROMEO	
DODGE	
FIAT	
JEEP	
LANCIA	
55257688	68075
68014084 AA	68012
68029988 AA	68012
68054683 AA	68012
68054683 AB	68012
6819 6129 AA	68074
68196128 AA	68073
68254607 AA	68075
K68254607 AA	68075

CITROËN	FAE
See also	
Ver también	
Voir aussi	
PEUGEOT-PSA	
16.095.200.80	68074
16.095.203.80	68073
16.095.205.80	68080
1618 EY	68074
1618 FY	68073
1618 SA	68080
55.228.787	68080

CONTINENTAL	FAE
280-355-000-2380	68092
280-355-000-3380	68002
280-355-002-0380	68068
280-355-002-6380	68062
280-355-002-8380	68092
280-355-003-0380	68068
280-355-003-4380	68033
280-355-004-0380	68093
280-355-004-4380	68092
280-355-004-5380	68013
280-355-004-8380	68019
280-355-004-9380	68059
280-355-005-0380	68059
280-355-005-2380	68030
280-355-005-3380	68078
291-000-021-2900	68002
291-000-021-3000	68035
291-000-021-3100	68011
291-000-021-3300	68001
291-000-021-3400	68057
291-000-021-3500	68036
291-000-021-3700	68084
291-000-021-4100	68083
291-000-021-4300	68049
291-000-021-4500	68024
291-000-021-4900	68083
291-000-021-5000	68014
291-000-021-5100	68017
291-000-021-5200	68007
291-000-021-5600	68025
291-000-021-5900	68064
291-000-021-6100	68056
291-000-080-9700	68063
291-000-080-9800	68058
291-000-080-9900	68048
291-000-081-0300	68079
291-000-081-0700	68093
291-000-081-0900	68007
291-000-081-1110	68036
291-000-082-6800	68089
291-000-082-7400	68002
291-000-085-4900	68076
291-000-085-5000	68042
291-000-097-8200	68067
A2C59507002Z	68003
A2C59507003Z	68091
A2C59507004Z	68005
A2C59507006Z	68097
A2C59507007Z	68026
A2C59507009Z	68028
A2C59507010Z	68047
A2C59507011Z	68088
A2C59507498Z	68027
A2C59507499Z	68018
A2C59507499Z	68022
A2C59507500Z	68033
A2C59507501Z	68043
A2C59507502Z	68069
A2C59507505Z	68050
A2C59507508Z	68123
A2C59507510Z	68096

DAF	FAE
1677125	68009
1689812	68009
1810691	68009

DELPHI	FAE
TS30000	68026
TS30002	68045
TS30006	68080
TS30009	68044
TS30020	68001
TS30022	68047
TS30025	68123
TS30028	68096
TS30036	68092
TS30037	68002
TS30040	68042
TS30049	68043
TS30050	68053
TS30052	68051
TS30054	68018
TS30054	68022
TS30055	68046
TS30057	68039
TS30058	68029
TS30058	68031
TS30059	68050
TS30064	68088
TS30065	68069
TS30066	68091
TS30068	68052
TS30069	68043
TS30071	68012
TS30072	68015
TS30073	68031
TS30076	68016
TS30077	68049
TS30078	68028
TS30079	68011
TS30080	68076
TS30082	68057
TS30083	68033
TS30086	68036
TS30088	68036
TS30089	68063
TS30090	68017
TS30092	68029
TS30101	68054
TS30103	68080
TS30106	68079
TS30108	68067
TS30110	68080
TS30114	68061
TS30139	68003
TS30140	68097
TS30140-11B1	68097
TS30141	68002
TS30145	68083
TS30152	68089
TS30154	68002
TS30161	68040
TS30162	68083
TS30164	68014
TS30176	68007
TS30188	68073
TS30215	68056
TS30239	68037
TS30240	68075
TS30247	68021
TS30257	68023
TS30316-12B1	68013
TS30317-12B1	68019
TS30318-12B1	68048

DIESEL TECHNIC	FAE
11.80701	68059
12.24250	68081
12.24251	68073
12.24254	68074

D. TECHNIC Cont.	FAE
12.27030	68081
4.69087	68029
4.69088	68004
4.69089	68046
4.69531	68077
4.69532	68071
4.69535	68018
4.69538	68031
4.69539	68031
4.69546	68018
4.69750	68060
4.69751	68050
4.69753	68043
4.69762	68029
4.69771	68040
4.69774	68027
4.69775	68012
4.69776	68023
4.69777	68039
5.44019	68009
7.25518	68006

EPS	FAE
1.220.002	68002
1.220.003	68001
1.220.005	68003
1.220.005	68005
1.220.016	68035
1.220.016	68064
1.220.018	68036
1.220.019	68024
1.220.021	68028
1.220.021	68057
1.220.035	68079
1.220.036	68097
1.220.037	68080
1.220.042	68091
1.220.044	68082
1.220.048	68042
1.220.053	68043
1.220.054	68050
1.220.055	68046
1.220.055	68077
1.220.063	68033
1.220.067	68011
1.220.068	68047
1.220.069	68018
1.220.069	68022
1.220.075	68026
1.220.076	68076
1.220.077	68016
1.220.079	68039
1.220.079	68060
1.220.080	68054
1.220.081	68004
1.220.081	68015
1.220.081	68029
1.220.083	68041
1.220.084	68027
1.220.089	68067
1.220.091	68012
1.220.095	68049
1.220.096	68058
1.220.098	68021
1.220.099	68056
1.220.099	68063
1.220.100	68007
1.220.133	68031
1.220.151	68052
1.220.153	68023
1.220.154	68092
1.220.162	68084
1.220.165	68075
1.220.167	68037
1.220.169	68074
1.220.173	68040
1.220.178	68061
1.220.186	68069

EPS Cont.	FAE
1.220.187	68038
1.220.189	68034
1.220.193	68045
1.220.200	68051
1.220.210	68044
1.220.210	68123
1.220.215	68053
1.220.223	68096
1.220.225	68088
1.220.242	68068
1.220.242	68089
1.220.253	68093
1.220.256	68017
1.220.264	68083
1.220.271	68090
1.220.278	68014
1.220.291	68048
1.220.294	68073
1.220.295	68025
1.220.299	68071
1.220.303	68094
1.220.338	68015
1.220.347	68062
1.220.351	68081

ERA	FAE
550735	68096
550828	68091
550828A	68091
550901	68069
550901A	68069
550902	68047
550902A	68047
550903	68088
550903A	68088
550905	68123
550905A	68123
550942	68033
550943	68007
550944	68057
550944A	68057
550967	68003
550986	68080
550986A	68080
550987	68080
550989	68026
550990	68028
550990A	68028
550992	68097
550992A	68097
551011	68017
551011A	68017
551066	68038
551118	68005
551119	68011
551120	68089
551120A	68089
551121	68049
551121A	68049
551123	68058
551123A	68058
551124	68064
551125	68056
551125A	68056
551127	68033
551127A	68033
551128	68092
551129	68027
551129A	68027
551130	68018
551130A	68018
551131	68031
551132	68001
551134	68035
551135	68076
551135A	68076
551137	68043
551137A	68043

ERA Cont.	FAE
551139	68042
551139A	68042
551140	68036
551140A	68036
551141	68036
551142	68014
551143	68002
551144	68045
551144A	68045
551167	68043
551167A	68043
551169	68050
551250	68061
551288	68080
551410	68075
551410A	68075
551500A	68016
551501A	68046
551503A	68015
551503A	68034
551505A	68067
551507A	68044
551514A	68053
551517A	68038
551522A	68086
551524A	68074
551525A	68073
551526A	68081
551528A	68079
551530A	68002
551532A	68062
551534AA	68012
551535A	68039
551538A	68063
551625A	68023
551627A	68054
551630A	68004
551635A	68082
551637A	68016
551639A	68013
551640A	68040
551645A	68052
551654A	68094
551670A	68041
551708A	68083

FACET	FAE
22.0002	68002
22.0003	68001
22.0005	68003
22.0005	68005
22.0016	68035
22.0016	68064
22.0018	68036
22.0019	68024
22.0021	68028
22.0021	68057
22.0035	68079
22.0036	68097
22.0037	68080
22.0042	68091
22.0044	68082
22.0048	68042
22.0053	68043
22.0054	68050
22.0055	68046
22.0055	68077
22.0063	68033
22.0067	68011
22.0068	68047
22.0069	68018
22.0069	68022
22.0075	68026
22.0076	68076
22.0077	68016
22.0079	68039
22.0079	68060
22.0080	68054

FACET Cont.	FAE
22.0081	68004
22.0081	68015
22.0081	68029
22.0083	68041
22.0084	68027
22.0089	68067
22.0091	68012
22.0095	68049
22.0096	68058
22.0098	68021
22.0099	68056
22.0099	68063
22.0100	68007
22.0133	68031
22.0151	68052
22.0153	68023
22.0154	68092
22.0162	68084
22.0165	68075
22.0167	68037
22.0169	68074
22.0173	68040
22.0178	68061
22.0186	68069
22.0187	68038
22.0189	68034
22.0193	68045
22.0200	68051
22.0210	68044
22.0210	68123
22.0215	68053
22.0223	68096
22.0225	68088
22.0242	68068
22.0242	68089
22.0253	68093
22.0256	68017
22.0264	68083
22.0271	68090
22.0278	68014
22.0291	68048
22.0294	68073
22.0295	68025
22.0299	68071
22.0303	68094
22.0338	68015
22.0347	68062
22.0351	68081

FEBI	FAE
100801	68035
100804	68057
100807	68042
100808	68014
100810	68017
100811	68007
100812	68061
100815	68036
100818	68080
100821	68036
100822	68069
100823	68012
100826	68012
100827	68053
100829	68051
100830	68039
100831	68031
100833	68046
100835	68040
100838	68019
100844	68002
100852	68044
109070	68076
109192	68083
109230	68045
109686	68016
170373	68031
170462	68084

FEBI Cont.	FAE
170468	68006
170478	68050
170483	68015
170484	68094
170485	68012
171277	68006
174944	68073
174954	68074
175020	68067
176444	68002
177748	68054
48834	68088
48835	68016
48837	68011
48838	68097
48839	68027
48841	68002
48843	68018
48843	68022
48844	68026
48845	68001
48849	68005
48850	68028
49260	68062
49261	68047
49262	68068
49270	68089
49271	68049
49273	68058
49274	68064
49276	68063
49278	68083
49280	68056
49287	68033
49288	68091
49291	68123
49293	68079
49296	68092
49297	68025
49298	68043
49299	68029
49299	68034
49302	68096
49305	68003
49605	68006

FIAT	FAE
See also	
Ver también	
Voir aussi	
ALFA ROMEO	
CHRYSLER	
JEEP	
LANCIA	
51799538	68080
51807904	68086
51825673	68073
51825674	68074
51825680	68080
51825699	68081
51862720	68080
51900023	68081
55184538	68037
55197011	68044
55203809	68086
55204765	68061
55207978	68038
55210402	68080
55211656	68074
55212787	68086
55215116	68073
55218464	68073
55218465	68074
55218471	68080
55218489	68081
55228787	68080
55237922	68081
55252502	68037

FIAT Cont.	FAE
55257688	68075
55271706	68037
55271711	68075

G.M.	FAE
See also	
Ver también	
Voir aussi	
OPEL	
55190616	68047
55496933	68082
55557600	68038
55591173	68082

HELLA	FAE
6PT 010 376-101	68003
6PT 010 376-111	68002
6PT 010 376-121	68018
6PT 010 376-131	68027
6PT 010 376-151	68011
6PT 010 376-161	68026
6PT 010 376-171	68036
6PT 010 376-181	68035
6PT 010 376-191	68042
6PT 010 376-201	68029
6PT 010 376-201	68031
6PT 010 376-211	68028
6PT 010 376-221	68049
6PT 010 376-231	68056
6PT 010 376-241	68007
6PT 010 376-251	68076
6PT 010 376-271	68014
6PT 014 494-001	68061
6PT 014 494-011	68015
6PT 014 494-011	68029
6PT 014 494-021	68069
6PT 014 494-031	68003
6PT 014 494-041	68002
6PT 014 494-051	68005
6PT 014 494-061	68026
6PT 014 494-071	68092
6PT 014 494-081	68012
6PT 014 494-091	68050
6PT 014 494-101	68084
6PT 014 494-131	68012
6PT 014 494-141	68069
6PT 014 494-151	68049
6PT 014 494-171	68024
6PT 014 494-211	68094
6PT 014 494-241	68092
6PT 014 494-261	68001
6PT 014 494-291	68056
6PT 014 494-351	68035
6PT 014 494-361	68016
6PT 014 494-371	68091
6PT 014 494-411	68045
6PT 014 494-471	68094
6PT 014 494-491	68014
6PT 014 494-511	68031
6PT 014 494-541	68076
6PT 014 494-601	68028
6PT 014 494-621	68068
6PT 014 494-651	68038
6PT 014 494-721	68033
6PT 014 494-741	68094
6PT 014 494-751	68036
6PT 014 494-761	68016
6PT 014 494-841	68062
6PT 014 494-891	68041
6PT 014 495-021	68031
6PT 014 495-031	68027
6PT 014 495-041	68043
6PT 014 495-061	68036
6PT 014 495-071	68058
6PT 014 495-081	68063
6PT 014 495-091	68042
6PT 014 495-101	68007
6PT 014 495-111	68067

HELLA Cont.	FAE
6PT 014 495-121	68017
6PT 014 495-131	68025
6PT 358 181-001	68079
6PT 358 181-011	68002
6PT 358 181-031	68002
6PT 358 181-041	68080
6PT 358 181-051	68080
6PT 358 181-061	68031
6PT 358 181-071	68088
6PT 358 181-121	68057
6PT 358 181-131	68064
6PT 358 181-161	68097
6PT 358 181-181	68069
6PT 358 181-221	68051
6PT 358 181-231	68053
6PT 358 181-241	68046
6PT 358 181-381	68009
6PT 358 181-411	68094
6PT 358 181-441	68012
6PT 358 181-451	68123
6PT 358 181-461	68047
6PT 358 181-491	68044
6PT 358 181-511	68052
6PT 358 181-521	68089
6PT 358 181-531	68083
6PT 358 181-611	68039
6PT 358 181-621	68038
6PT 358 181-731	68077
6PT 358 181-741	68015
6PT 358 181-741	68060
6PT 358 181-821	68006
6PT 358 181-831	68006

HERTH & BUSS	FAE
70682000	68011
70682000	68016
70682001	68001
70682002	68026
70682003	68057
70682004	68076
70682007	68002
70682008	68042
70682009	68045
70682010	68056
70682011	68064
70682013	68002
70682014	68024
70682020	68036
70682024	68079
70682025	68049
70682026	68058
70682027	68063
70682029	68089
70682035	68014
70682036	68017
70682038	68007
70682041	68025
70682044	68092
70682053	68083
70682055	68016
70682072	68097
70682073	68033
70682074	68084
70682075	68068
70682081	68083
70682083	68048
70682098	68005
70682099	68092
70682200	68027
70682201	68018
70682202	68043
70682203	68015
70682203	68029
70682204	68012
70682205	68050
70682206	68053
70682208	68046
70682210	68051

H & BUSS Cont.	FAE
70682219	68034
70682225	68015
70682229	68015
70682232	68004
70682233	68071
70682238	68041
70682242	68052
70682244	68023
70682255	68031
70682261	68077
70682263	68094
70682269	68039
70682269	68060
70682401	68069
70682402	68047
70682406	68096
70682407	68091
70682408	68088
70682414	68123
70682447	68082
70682603	68067
70682704	68061
70682710	68044
70682711	68086
70682718	68073
70682721	68074
70682722	68081
70682727	68081
70682735	68080
70683003	68003
70683005	68035
70683006	68036
70683025	68092
70683026	68028
70683029	68059
70683031	68002
70683032	68078
70683034	68013
70683035	68062
70683039	68033
70683046	68068
70683052	68019
70683053	68059
70683061	68092
70683070	68030
70683074	68093
70683075	68021
70683095	68090
70683802	68006
70683803	68006

HITACHI	FAE
135502	68051
135503	68013
135504	68034
135505	68089
135521	68083
135523	68046
135531	68015
135533	68038
135534	68041
135535	68023
135537	68094
135538	68040
135539	68082
135540	68084
135542	68067
137000	68001
137001	68002
137002	68003
137003	68005
137004	68011
137005	68027
137006	68016
137007	68024
137008	68014
137009	68017
137010	68026

HITACHI Cont.	FAE
137011	68049
137012	68035
137013	68028
137014	68058
137015	68047
137016	68073
137017	68074
137018	68043
137019	68029
137020	68052
137021	68064
137022	68043
137023	68061
137025	68097
137026	68021
137028	68088
137030	68091
137031	68069
137032	68044
137034	68036
137035	68018
137038	68123
137041	68012
137043	68063
137044	68033
137045	68042
137046	68079
137047	68002
137048	68076
137049	68057
137050	68045
137057	68025
137068	68092
137069	68036
137071	68031
137072	68007
137073	68056
137075	68093
137077	68019
137080	68054
137083	68080
137084	68096
137085	68086
137091	68048
137099	68022
2505502	68051
2505503	68013
2505504	68034
2505505	68089
2505521	68083
2505523	68046
2505531	68015
2505533	68038
2505534	68041
2505535	68023
2505537	68094
2505538	68040
2505539	68082
2505540	68084
2505542	68067
2507000	68001
2507001	68002
2507002	68003
2507003	68005
2507004	68011
2507005	68027
2507006	68016
2507007	68024
2507008	68014
2507009	68017
2507010	68026
2507011	68049
2507012	68035
2507013	68028
2507014	68058
2507015	68047
2507016	68073
2507017	68074

HITACHI Cont.	FAE
2507018	68043
2507019	68029
2507020	68052
2507021	68064
2507022	68043
2507023	68061
2507025	68097
2507026	68021
2507028	68088
2507030	68091
2507031	68069
2507032	68044
2507034	68036
2507035	68018
2507038	68123
2507041	68012
2507043	68063
2507044	68033
2507045	68042
2507046	68079
2507047	68002
2507048	68076
2507049	68057
2507050	68045
2507057	68025
2507068	68092
2507069	68036
2507071	68031
2507072	68007
2507073	68056
2507075	68093
2507077	68019
2507080	68054
2507083	68080
2507084	68096
2507085	68086
2507091	68048
2507099	68022

HJS	FAE
92 09 4000	68001
92 09 4002	68097
92 09 4004	68011
92 09 4005	68002
92 09 4006	68016
92 09 4009	68005
92 09 4010	68003
92 09 4011	68035
92 09 4012	68026
92 09 4013	68028
92 09 4015	68033
92 09 4018	68076
92 09 4020	68091
92 09 4022	68088
92 09 4025	68027
92 09 4026	68018
92 09 4027	68047
92 09 4028	68043
92 09 4030	68042
92 09 4031	68089
92 09 4031	68090
92 09 4033	68079
92 09 4039	68036
92 09 4040	68057
92 09 4043	68045
92 09 4047	68036
92 09 4050	68083
92 09 4051	68049
92 09 4052	68092
92 09 4053	68058
92 09 4053	68064
92 09 4055	68123
92 09 4057	68063
92 09 4068	68083
92 09 4070	68016
92 09 4085	68068
92 09 4086	68025
92 09 4090	68064

HJS Cont.	FAE
92 09 4091	68062
92 09 4092	68056
92 09 4093	68029
92 09 4094	68031
92 09 4095	68096
92 09 4096	68043
92 09 4097	68017
92 09 4098	68014
92 09 4100	68007
92 09 4101	68084
92 09 4106	68039
92 09 4107	68050
92 09 4108	68046
92 09 4109	68012
92 09 4110	68040
92 09 4119	68018
92 09 4122	68015
92 09 4123	68022
92 09 4123	68077
92 09 4124	68002
92 09 4136	68069
92 09 4144	68012
92 09 4146	68012
92 09 4147	68038
92 09 4151	68013
92 09 4154	68059
92 09 4155	68019
92 09 4157	68078
92 09 4165	68041
92 09 4173	68093
92 09 4177	68053
92 09 4178	68034
92 09 4179	68044
92 09 4181	68061
92 09 4182	68080
92 09 4184	68060
92 09 4186	68054
92 09 4187	68052
92 09 4205	68051
92 09 4209	68094
92 09 4212	68080
92 09 4214	68002
92 09 4215	68067
92 09 4223	68074
92 09 4225	68071

HOFFER	FAE
7451908	68080
7451908E	68080
7451916	68003
7451916	68005
7451917	68035
7451918	68036
7451918E	68036
7451920	68049
7451920E	68049
7451921	68058
7451921E	68058
7451922	68036
7451922E	68036
7451923	68036
7451924	68062
7451927	68011
7451927	68016
7451928	68002
7451929	68026
7451931	68057
7451931E	68057
7451932	68045
7451932E	68045
7451933	68001
7451935	68011
7451935	68016
7451935E	68011
7451936	68001
7451937	68028
7451937E	68028
7451938	68092

HOFFER Cont.	FAE
7451938E	68092
7451940	68033
7451940E	68033
7451941	68016
7451941E	68042
7451943	68047
7451943E	68047
7451944	68088
7451944E	68088
7451946	68123
7451950	68069
7451950E	68069
7451951	68091
7451951E	68091
7451955	68096
7451962	68043
7451962E	68043
7451963	68027
7451963E	68027
7451964	68050
7451964E	68050
7451965	68015
7451965	68029
7451965E	68029
7451966	68053
7451966A1	68053
7451966E	68053
7451967	68052
7451968	68052
7451968E	68052
7451969	68051
7451969E	68051
7451970	68018
7451970E	68018
7451972	68012
7451976	68043
7451976E	68043
7451977	68022
7451979	68018
7451980	68046
7451980E	68046
7451981	68015
7451981	68029
7451982	68039
7451982E	68039
7451983	68046
7451984	68015
7451986	68080
7451986A1	68080
7451986E	68080
7451992	68044
7451992A1	68044
7451992E	68044
7451998	68061
7452005	68067
7452005E	68067
7452017	68031
7452017A1	68031
7452017E	68031
7452045	68080
7452050	68017
7452050E	68017
7452054	68063
7452054E	68063
7452055	68026
7452057	68097
7452057E	68097
7452062	68038
7452076	68038
7452103	68060
7452103E	68060
7452104	68034
7452105	68054
7452105E	68054
7452109	68060
7452111	68040
7452112	68094
7452116	68041

HOFFER Cont.	FAE
7452116E	68041
7452119	68012
7452120	68040
7452120	68071
7452120E	68040
7452120E	68071
7452123	68077
7452129E	68071
7452133	68007
7452138	68086
7452138E	68086
7452140	68001
7452143	68037
7452144	68075
7452146	68074
7452146A1	68074
7452146E	68074
7452147	68073
7452147A1	68073
7452147E	68073
7452148	68081
7452148E	68081
7452154	68081
7452166	68079
7452166E	68079
7452216	68089
7452216E	68089
7452217	68064
7452219	68083
7452219E	68083
7452220	68056
7452220	68063
7452220E	68056
7452220E	68063
7452229	68002
7452232	68021
7452232E	68021
7452236	68014
7452239	68025
7452239E	68025
7452242	68083
7452242E	68083
7452245	68084
7452256	68042
7452256E	68042
7452261	68002
7452278	68013
7452281	68033
7452307	68076
7452307E	68076
7452313	68093
7452317	68019
7452321	68090
7452323	68048
7452325	68092
7452329	68078
7452334	68068
7452341	68092
7452341E	68092
7452342	68092
7452352	68059
7452354	68093
7452361	68059
7452361E	68059
7452362	68030
7452396	68004
7452403	68082
7452403E	68082
7452428	68041
7452442	68023
7452453	68031
7452470	68006
7452491	68015
7452492	68006
7452560	68045

INTERMOTOR	FAE
27000	68063
27014	68061
27019	68044
27024	68080
27029	68036
27040	68031
27042	68046
27044	68052
27047	68047
27054	68016
27058	68033
27062	68005
27063	68011
27063	68016
27065	68001
27067	68002
27068	68011
27068	68016
27070	68062
27071	68049
27075	68092
27076	68045
27077	68057
27078	68026
27080	68028
27082	68036
27084	68043
27086	68029
27087	68018
27087	68022
27088	68053
27089	68004
27091	68043
27092	68017
27095	68088
27097	68096
27098	68080
27099	68004
27103	68067
27114	68123
27137	68038
27144	68123
27146	68097
27147	68007
27152	68075
27156	68086
27172	68046
27174	68060
27175	68034
27177	68094
27188	68035
27189	68001
27191	68026
27197	68081
27200	68051
27202	68046
27204	68038
27213	68001
27215	68037
27216	68075
27218	68073
27219	68081
27232	68079
27245	68068
27245	68089
27247	68002
27253	68014
27258	68083
27270	68042
27272	68002
27276	68013
27278	68033
27279	68024
27297	68025
27307	68019
27313	68023
27314	68084
27317	68083

INTERMOTOR Cont.	FAE
27319	68040
27320	68093
27322	68056
27323	68064
27326	68048
27330	68069
27334	68027
27342	68074
27355	68082
27357	68003
27367	68041
27394	68031
27396	68004
27401	68012
27445	68059

IVECO	FAE
See also	
Ver también	
Voir aussi	
CASE IH	
504102603	68006
504109529	68006
5801291814	68006
5801291815	68006
5801455940	68006
5801455941	68006

JEEP	FAE
See also	
Ver también	
Voir aussi	
CHRYSLER	
FIAT	
55257688	68075
55271711	68075

JPN	FAE
75E9006-JPN	68083
75E9009-JPN	68033
75E9015-JPN	68084
75E9033-JPN	68018
75E9034-JPN	68027
75E9035-JPN	68029
75E9035-JPN	68031
75E9036-JPN	68054
75E9040-JPN	68047
75E9041-JPN	68123
75E9043-JPN	68096
75E9045-JPN	68088
75E9047-JPN	68091
75E9053-JPN	68036
75E9054-JPN	68028
75E9060-JPN	68076
75E9061-JPN	68057
75E9067-JPN	68079
75E9077-JPN	68042
75E9081-JPN	68067

KW	FAE
422 002	68002
422 003	68001
422 005	68003
422 005	68005
422 016	68035
422 016	68064
422 018	68036
422 019	68024
422 021	68028
422 021	68057
422 035	68079
422 036	68097
422 037	68080
422 042	68091
422 044	68082
422 048	68042
422 053	68043
422 054	68050

KW Cont.	FAE
422 055	68046
422 055	68077
422 063	68033
422 067	68011
422 068	68047
422 069	68018
422 069	68022
422 075	68026
422 076	68076
422 077	68016
422 079	68039
422 079	68060
422 080	68054
422 081	68004
422 081	68015
422 081	68029
422 083	68041
422 084	68027
422 089	68067
422 091	68012
422 095	68049
422 096	68058
422 098	68021
422 099	68056
422 099	68063
422 100	68007
422 133	68031
422 151	68052
422 153	68023
422 154	68092
422 162	68084
422 165	68075
422 167	68037
422 169	68074
422 173	68040
422 178	68061
422 186	68069
422 187	68038
422 189	68034
422 193	68045
422 200	68051
422 210	68044
422 210	68123
422 215	68053
422 223	68096
422 225	68088
422 242	68068
422 242	68089
422 253	68093
422 256	68017
422 264	68083
422 271	68090
422 278	68014
422 291	68048
422 294	68073
422 295	68025
422 299	68071
422 303	68094
422 338	68015
422 347	68062
422 351	68081

LANCIA	FAE
See also	
Ver también	
Voir aussi	
CHRYSLER	
FIAT	
JEEP	
51807904	68086
55203809	68086
55212787	68086
55257688	68075
55271711	68075

LEMARK	FAE
LXT004	68005
LXT005	68011
LXT005	68016
LXT007	68001
LXT009	68002
LXT010	68011
LXT010	68016
LXT012	68062
LXT013	68049
LXT017	68092
LXT018	68045
LXT019	68057
LXT020	68026
LXT021	68036
LXT022	68028
LXT024	68036
LXT026	68043
LXT028	68029
LXT029	68018
LXT029	68022
LXT030	68053
LXT033	68043
LXT034	68017
LXT037	68088
LXT038	68004
LXT039	68096
LXT040	68080
LXT041	68004
LXT045	68067
LXT054	68123
LXT058	68063
LXT072	68061
LXT077	68044
LXT082	68080
LXT098	68031
LXT100	68046
LXT102	68052
LXT105	68047
LXT112	68016
LXT116	68033
LXT140	68038
LXT149	68097
LXT150	68007
LXT155	68075
LXT159	68086
LXT175	68046
LXT177	68060
LXT178	68034
LXT180	68094
LXT191	68035
LXT192	68001
LXT194	68026
LXT200	68081
LXT203	68051
LXT205	68046
LXT207	68038
LXT216	68001
LXT218	68037
LXT219	68075
LXT221	68073
LXT222	68081
LXT235	68079
LXT248	68068
LXT248	68089
LXT250	68002
LXT256	68014
LXT261	68083
LXT273	68042
LXT275	68002
LXT279	68013
LXT281	68033
LXT283	68024
LXT286	68025
LXT293	68019
LXT299	68023
LXT300	68084
LXT301	68083
LXT303	68040

LEMARK Cont.	FAE
LXT304	68093
LXT306	68056
LXT307	68064
LXT310	68048
LXT314	68069
LXT318	68027
LXT327	68074
LXT340	68082
LXT342	68003
LXT352	68041
LXT379	68031
LXT382	68004
LXT386	68012
LXT401	68059

LUCAS Electrical	FAE
LGS6000	68043
LGS6001	68053
LGS6002	68046
LGS6005	68052
LGS6008	68031
LGS6013	68018
LGS6013	68022
LGS6014	68029
LGS6016	68004
LGS6018	68062
LGS6021	68049
LGS6023	68028
LGS6024	68011
LGS6024	68016
LGS6025	68092
LGS6028	68002
LGS6030	68057
LGS6032	68001
LGS6033	68005
LGS6034	68026
LGS6036	68045
LGS6037	68033
LGS6040	68016
LGS6041	68036
LGS6043	68036
LGS6045	68017
LGS6053	68067
LGS6064	68080
LGS6067	68044
LGS6075	68061
LGS6079	68088
LGS6082	68123
LGS6084	68096
LGS6087	68091
LGS6093	68047
LGS7000	68063
LGS7010	68080
LGS7030	68038
LGS7038	68097
LGS7039	68007
LGS7044	68075
LGS7048	68086
LGS7062	68060
LGS7063	68034
LGS7065	68094
LGS7076	68035
LGS7083	68081
LGS7086	68038
LGS7095	68001
LGS7097	68037
LGS7098	68075
LGS7100	68073
LGS7101	68081
LGS7114	68079
LGS7125	68068
LGS7125	68089
LGS7127	68002
LGS7133	68014
LGS7135	68025
LGS7138	68083
LGS7150	68042
LGS7151	68002

LUCAS Cont.	FAE
LGS7155	68013
LGS7157	68033
LGS7158	68024
LGS7163	68051
LGS7169	68019
LGS7175	68023
LGS7176	68084
LGS7177	68083
LGS7179	68040
LGS7180	68093
LGS7182	68056
LGS7183	68064
LGS7186	68048
LGS7190	68069
LGS7194	68027
LGS7203	68074
LGS7216	68082
LGS7218	68003
LGS7228	68041
LGS7255	68031
LGS7258	68004
LGS7262	68012

MAGNETI MARELLI	FAE
172000011010	68002
172000013010	68003
172000013010	68005
172000015010	68026
172000017010	68001
172000019010	68011
172000019010	68016
172000021010	68003
172000021010	68005
172000023010	68015
172000023010	68029
172000025010	68036
172000027010	68028
172000029010	68033
172000031010	68088
172000033010	68076
172000035010	68018
172000035010	68022
172000037010	68097
172000039010	68024
172000043010	68047
172000047010	68091
172000051010	68079
172000053010	68035
172000061010	68027
172000063010	68042
172000065010	68057
172000069010	68016
172000079010	68046
172000089010	68067
172000091010	68012
172000099010	68036
172000101010	68063
172000105010	68089
172000109010	68039
172000113010	68049
172000119010	68050
172000125010	68045
172000137010	68002
172000145010	68123
172000147010	68054
172000151010	68031
172000155010	68040
172000163010	68069
172000169010	68052
172000185010	68060
172000189010	68014
172000191010	68064
172000195010	68022
172000205010	68043
172000209010	68096
172000215010	68083
172000217010	68058
172000219010	68061

M. MARELLI Cont.	FAE
172000225010	68044
172000229010	68017
172000241010	68007
172000245010	68038
172000247010	68048
172000249010	68013
172000251010	68019
172000259010	68080
172000267010	68011
172000281010	68043
172000283010	68023
172000301010	68073
172000327010	68082
172000341010	68053
172000343010	68074
172000345010	68031
172000355010	68083
172000361010	68062
172000363010	68094
172000387010	68086
172000401010	68025
172000411010	68092
172000421010	68004
172000429010	68081
172000433010	68084
172000437010	68015
172000439010	68090
172000441010	68030
172000451010	68093
172000469010	68033
172000477010	68029
172000479010	68034
172000507010	68056
172000517010	68051
172000527010	68081
172000529010	68092
172000539010	68041
172000547010	68078
172000551010	68059
172000563010	68080
172000565010	68038
172000605010	68068
172000607010	68077
172000701010	68075
STS0033	68076
STS0037	68097
STS0063	68042
STS0079	68046
STS0125	68045
STS0155	68040
STS0191	68064
STS0205	68043
STS0215	68083
STS0219	68061
STS0225	68044
STS0259	68080
STS0281	68043
STS0301	68073
STS0327	68082
STS0343	68074
STS0355	68083
STS0361	68062
STS0421	68004
STS0429	68081
STS0451	68093
STS0527	68081
STS0547	68078
STS0563	68080
STS0701	68075

MAN	FAE
04L 906 088 BF	68059

MAPCO	FAE
88011	68044
88120	68045
88122	68016
88123	68042

MAPCO Cont.	FAE
88125	68057
88126	68033
88127	68002
88128	68035
88129	68002
88130	68002
88142	68083
88143	68083
88146	68084
88147	68025
88150	68063
88151	68058
88159	68079
88161	68011
88169	68013
88171	68048
88173	68017
88174	68014
88175	68007
88176	68093
88177	68076
88179	68033
88188	68089
88430	68074
88431	68073
88710	68047
88711	68091
88712	68123
88717	68088
88718	68096
88722	68069
88820	68001
88821	68049
88822	68016
88823	68028
88824	68005
88825	68026
88827	68036
88828	68003
88829	68097
88837	68092
88859	68018
88860	68039
88861	68046
88862	68015
88864	68031
88866	68027
88867	68012
88868	68043
88869	68094
88874	68052
88877	68043
88878	68053

MEAT & DORIA	FAE
11908	68080
11908E	68080
11916	68003
11916	68005
11917	68035
11918	68036
11918E	68036
11920	68049
11920E	68049
11921	68058
11921E	68058
11922	68036
11922E	68036
11923	68036
11924	68062
11927	68011
11927	68016
11928	68002
11929	68026
11931	68057
11931E	68057
11932	68045
11932E	68045

M. & DORIA Cont.	FAE
11933	68001
11935	68011
11935	68016
11935E	68011
11936	68001
11937	68028
11937E	68028
11938	68092
11938E	68092
11940	68033
11940E	68033
11941	68016
11941E	68042
11943	68047
11943E	68047
11944	68088
11944E	68088
11946	68123
11950	68069
11950E	68069
11951	68091
11951E	68091
11955	68096
11962	68043
11962E	68043
11963	68027
11963E	68027
11964	68050
11964E	68050
11965	68015
11965	68029
11965E	68029
11966	68053
11966A1	68053
11966E	68053
11967	68052
11968	68052
11968E	68052
11969	68051
11969E	68051
11970	68018
11970E	68018
11972	68012
11973	68012
11976	68043
11976E	68043
11977	68022
11979	68018
11980	68046
11980E	68046
11981	68015
11981	68029
11982	68039
11982E	68039
11983	68046
11984	68015
11986	68080
11986A1	68080
11986E	68080
11992	68044
11992A1	68044
11992E	68044
11998	68061
12005	68067
12005E	68067
12017	68031
12017A1	68031
12017E	68031
12050	68017
12050E	68017
12054	68063
12054E	68063
12055	68026
12057	68097
12057E	68097
12062	68038
12076	68038
12103	68060

M. & DORIA Cont.	FAE
12103E	68060
12104	68034
12105	68054
12105E	68054
12109	68060
12111	68040
12112	68094
12116	68041
12116E	68041
12119	68012
12120	68040
12120	68071
12120E	68040
12120E	68071
12123	68077
12133	68007
12138	68086
12138E	68086
12140	68001
12143	68037
12144	68075
12146	68074
12146A1	68074
12146E	68074
12147	68073
12147A1	68073
12147E	68073
12148	68081
12148E	68081
12154	68081
12166	68079
12166E	68079
12216	68089
12216E	68089
12217	68064
12219	68083
12219E	68083
12220	68056
12220	68063
12220E	68056
12220E	68063
12229	68002
12232	68021
12232E	68021
12236	68014
12239	68025
12239E	68025
12242	68083
12242E	68083
12245	68084
12256	68042
12256E	68042
12261	68002
12278	68013
12281	68033
12307	68076
12307E	68076
12313	68093
12317	68019
12321	68090
12323	68048
12325	68092
12329	68078
12334	68068
12341	68092
12341E	68092
12342	68092
12352	68059
12354	68093
12361	68059
12361E	68059
12362	68030
12396	68004
12403	68082
12403E	68082
12428	68041
12442	68023
12453	68031

M. & DORIA Cont.	FAE
12470	68006
12491	68015
12492	68006
12560	68045

MERCEDES-BENZ	FAE
See also	
Ver también	
Voir aussi	
SMART	
000 905 07 01	68041
000 905 22 05	68094
000 905 28 05	68094
000 905 36 08	68071
000 905 37 05	68046
000 905 37 08	68004
000 905 39 05	68071
000 905 40 05	68004
000 905 41 08	68060
000 905 43 05	68012
000 905 43 06	68040
000 905 44 05	68023
000 905 48 00	68060
000 905 52 02	68034
000 905 52 05	68029
000 905 64 04	68027
000 905 65 04	68043
000 905 67 04	68031
000 905 68 04	68012
000 905 70 04	68041
000 905 72 04	68040
000 905 79 01	68094
000 905 85 01	68041
000 905 86 04	68015
000 905 87 00	68077
000 905 88 04	68018
000 905 89 04	68034
000 905 90 04	68060
001 905 06 00	68040
001 905 07 00	68043
001 905 09 00	68053
001 905 24 00	68051
001 905 29 00	68060
001 905 30 00	68022
005 153 10 28	68046
005 153 11 28	68039
005 153 18 28	68015
005 153 22 28	68018
005 153 41 28	68015
005 153 45 28	68094
005 153 66 28	68031
005 153 79 28	68012
005 153 80 28	68023
005 153 91 28	68054
005 153 92 28	68050
007 153 09 28	68054
007 153 25 28	68094
007 153 34 28	68018
007 153 35 28	68060
007 153 47 28	68012
007 153 62 28	68046
007 153 63 28	68039
007 153 65 28	68015
007 153 66 28	68031
007 153 75 28	68015
007 153 79 28	68094
007 153 84 28	68012
007 153 85 28	68023
007 153 89 28	68054
007 153 90 28	68012
007 153 91 28	68050
007 153 92 28	68052
007 153 94 28	68043
007 153 95 28	68018
007 153 96 28	68060
007 153 98 28	68094
008 153 22 28	68027
008 153 27 28	68012

M. BENZ Cont.	FAE
008 153 28 28	68052
008 153 34 28	68015
008 153 37 28	68031
008 153 37 29	68031
008 153 41 28	68029
A 000 905 07 01	68041
A 000 905 22 05	68094
A 000 905 28 05	68094
A 000 905 36 08	68071
A 000 905 37 05	68046
A 000 905 37 08	68004
A 000 905 39 05	68071
A 000 905 40 05	68004
A 000 905 41 08	68060
A 000 905 43 05	68012
A 000 905 43 06	68040
A 000 905 44 05	68023
A 000 905 48 00	68060
A 000 905 52 02	68034
A 000 905 52 05	68029
A 000 905 64 04	68027
A 000 905 65 04	68043
A 000 905 67 04	68031
A 000 905 68 04	68012
A 000 905 70 04	68041
A 000 905 72 04	68040
A 000 905 79 01	68094
A 000 905 85 01	68041
A 000 905 86 04	68015
A 000 905 87 00	68077
A 000 905 88 04	68018
A 000 905 89 04	68034
A 000 905 90 04	68060
A 001 905 06 00	68040
A 001 905 07 00	68043
A 001 905 09 00	68053
A 001 905 24 00	68051
A 001 905 29 00	68060
A 001 905 30 00	68022
A 005 153 10 28	68046
A 005 153 11 28	68039
A 005 153 18 28	68015
A 005 153 22 28	68018
A 005 153 41 28	68015
A 005 153 45 28	68094
A 005 153 66 28	68031
A 005 153 79 28	68012
A 005 153 80 28	68023
A 005 153 91 28	68054
A 005 153 92 28	68050
A 007 153 09 28	68054
A 007 153 25 28	68094
A 007 153 34 28	68018
A 007 153 35 28	68060
A 007 153 47 28	68012
A 007 153 62 28	68046
A 007 153 63 28	68039
A 007 153 65 28	68015
A 007 153 66 28	68031
A 007 153 75 28	68015
A 007 153 79 28	68094
A 007 153 84 28	68012
A 007 153 89 28	68054
A 007 153 91 28	68050
A 007 153 92 28	68052
A 007 153 94 28	68043
A 007 153 95 28	68018
A 007 153 96 28	68060
A 007 153 98 28	68094
A 008 153 22 28	68027
A 008 153 27 28	68012
A 008 153 28 28	68052
A 008 153 34 28	68015
A 008 153 37 28	68031
A 008 153 37 29	68031
A 008 153 41 28	68029
A 007 153 90 28	68012

METZGER	FAE
0894001	68003
0894002	68027
0894003	68002
0894004	68035
0894005	68091
0894006	68005
0894007	68011
0894007	68016
0894009	68097
0894011	68001
0894012	68001
0894013	68026
0894014	68057
0894015	68076
0894018	68018
0894019	68033
0894021	68084
0894023	68028
0894024	68069
0894026	68002
0894030	68045
0894031	68047
0894039	68033
0894040	68036
0894045	68012
0894046	68050
0894048	68088
0894049	68036
0894052	68043
0894054	68054
0894058	68083
0894060	68036
0894064	68088
0894065	68046
0894068	68079
0894070	68049
0894071	68092
0894074	68058
0894075	68018
0894076	68015
0894076	68029
0894079	68123
0894081	68063
0894087	68067
0894091	68012
0894092	68089
0894102	68002
0894106	68053
0894116	68052
0894123	68096
0894135	68040
0894141	68083
0894146	68014
0894147	68017
0894154	68016
0894162	68051
0894182	68039
0894198	68094
0894209	68073
0894211	68074
0894220	68044
0894232	68022
0894265	68068
0894267	68025
0894296	68064
0894299	68039
0894299	68060
0894300	68062
0894301	68021
0894305	68056
0894306	68007
0894349	68041
0894350	68094
0894359	68034
0894361	68038
0894365	68048
0894366	68090
0894367	68093

METZGER Cont.	FAE
0894372	68068
0894380	68033
0894382	68084
0894389	68023
0894399	68042
0894402	68013
0894405	68031
0894410	68093
0894496	68046
0894497	68023
0894502	68080
0894512	68078
0894513	68004
0894516	68092
0894523	68082
0894524	68080
0894526	68077
0894533	68059
0894534	68059
0894535	68030
0894542	68092
0894551	68024
0894562	68001
0894563	68084
0894565	68058
0894568	68089
0894569	68053
0894573	68083
0894574	68014
0894575	68051
0894580	68094
0894583	68044
0894586	68039
0894586	68060
0894587	68062
0894588	68007
0894589	68034
0894590	68048
0894592	68021
0894596	68023
0894597	68075
0894601	68046
0894603	68061
0894608	68081
0894609	68081
0894614	68043
0894616	68015
0894617	68031
0894620	68076
0894701	68003
0894702	68027
0894703	68002
0894706	68005
0894707	68011
0894707	68016
0894715	68076
0894718	68018
0894776	68015
0894776	68029
0894799	68042
0894804	68019
0894806	68038
0894815	68092
0894830	68092
0894847	68015
0894856	68071
0894857	68097
0894858	68028
0894861	68091
0894865	68002
0894866	68004
0894868	68054
0894869	68079
0894871	68067
0894875	68035
0894877	68002
0894879	68012
0894880	68016

METZGER Cont.	FAE
0894885	68096
0894886	68057
0894891	68074
0894893	68082
0894897	68040
0894902	68017
0894906	68050
0894909	68013
0894913	68083
0894916	68041
0894924	68073
0894930	68123
0894934	68045
0894945	68063
0894957	68025
0894958	68068
0894959	68052
0894960	68049
0894965	68093
0894972	68024
0894978	68056
0894979	68078
0894980	68064
0894981	68092
0894982	68047
0894989	68036
KXT089	68043

MEYLE	FAE
014 800 0124	68015
014 800 0124	68029
014 800 0125	68027
014 800 0126	68031
014 800 0127	68018
014 800 0128	68043
014 800 0133	68034
014 800 0134	68022
014 800 0136	68050
014 800 0137	68012
014 800 0139	68046
014 800 0140	68040
014 800 0143	68051
014 800 0144	68094
014 800 0147	68039
014 800 0147	68060
014 800 0152	68004
014 800 0154	68053
014 800 0163	68041
014 800 0171	68077
014 800 0175	68015
014 800 0186	68052
014 800 0188	68041
014 800 0189	68071
014 800 0190	68054
114 800 0046	68001
114 800 0048	68003
114 800 0049	68005
114 800 0050	68011
114 800 0051	68016
114 800 0052	68026
114 800 0054	68033
114 800 0055	68035
114 800 0056	68036
114 800 0057	68028
114 800 0058	68049
114 800 0059	68058
114 800 0060	68063
114 800 0061	68056
114 800 0062	68064
114 800 0063	68097
114 800 0065	68079
114 800 0067	68042
114 800 0068	68007
114 800 0073	68025
114 800 0080	68092
114 800 0083	68076
114 800 0089	68036
114 800 0090	68068

MEYLE Cont.	FAE
114 800 0099	68062
114 800 0104	68002
114 800 0109	68002
114 800 0111	68057
114 800 0112	68045
114 800 0115	68016
114 800 0120	68014
114 800 0123	68068
114 800 0124	68093
114 800 0133	68084
114 800 0134	68017
114 800 0150	68089
114 800 0152	68083
114 800 0156	68083
114 800 0167	68024
114 800 0169	68021
114 800 0172	68048
114 800 0173	68090
114 800 0179	68059
114 800 0181	68030
114 800 0186	68078
114 800 0187	68019
114 800 0190	68059
114 800 0193	68013
114 800 0197	68045
114 800 0201	68092
114 800 0204	68033
114 800 0239	68092
14-34 800 0002	68009
214 800 0021	68044
214 800 0024	68061
214 800 0026	68080
214 800 0031	68080
214 800 0037	68073
214 800 0039	68074
214 800 0044	68086
214 800 0081	68037
234 800 0006	68006
234 800 0009	68006
234 800 0011	68006
514 800 0033	68067
614 800 0031	68047
614 800 0032	68088
614 800 0036	68091
614 800 0037	68096
614 800 0042	68069
614 800 0045	68044
614 800 0045	68123
614 800 0050	68038
614 800 0083	68082
MSE0005	68043
MSE0022	68064
MSE0023	68097
MSE0027	68042
MSE0057	68046
MSE0067	68076
MSE0080	68062
MSE0092	68045
MSE0103	68093
MSE0131	68083
MSE0135	68083
MSE0150	68044
MSE0156	68044
MSE0159	68061
MSE0161	68080
MSE0166	68080
MSE0180	68006
MSE0182	68006
MSE0183	68006
MSE0198	68004
MSE0227	68078
MSE0234	68045
MSE0279	68073
MSE0280	68074
MSE0342	68040
MSE0360	68082

MOBILETRON	FAE
EG-EU001	68003
EG-EU002	68001
EG-EU003	68002
EG-EU004	68036
EG-EU006	68088
EG-EU007	68092
EG-EU008	68028
EG-EU009	68049
EG-EU010	68025
EG-EU011	68091
EG-EU013	68036
EG-EU014	68068
EG-EU023	68093
EG-EU026	68084
EG-EU027	68016
EG-EU028	68097
EG-EU030	68005
EG-EU031	68047
EG-EU033	68083
EG-EU034	68002
EG-EU036	68050
EG-EU037	68027
EG-EU038	68043
EG-EU039	68026
EG-EU040	68031
EG-EU041	68007
EG-EU043	68123
EG-EU044	68096
EG-EU048	68044
EG-EU049	68013
EG-EU052	68046
EG-EU053	68015
EG-EU054	68079
EG-EU055	68011
EG-EU056	68033
EG-EU057	68035
EG-EU059	68042
EG-EU065	68057
EG-EU066	68058
EG-EU067	68063
EG-EU068	68056
EG-EU069	68064
EG-EU076	68062
EG-EU080	68045
EG-EU082	68014
EG-EU084	68017
EG-EU086	68069
EG-EU101	68053
EG-EU104	68012
EG-EU108	68051
EG-EU113	68034
EG-EU114	68080
EG-EU116	68061
EG-EU117	68089
EG-EU121	68031
EG-EU132	68015
EG-EU135	68041
EG-EU136	68040
EG-EU140	68038
EG-EU150	68033
EG-EU154	68074
EG-EU155	68037
EG-EU158	68081
EG-EU159	68023
EG-EU160	68082
EG-EU164	68024
EG-EU167	68067
EG-EU170	68029
EG-EU171	68018
EG-EU172	68022
EG-EU174	68052
EG-EU177	68002
EG-EU180	68076
EG-EU181	68016
EG-EU182	68001
EG-EU189	68054
EG-EU199	68048
EG-EU203	68019

MOBILETRON Cont.	FAE
EG-EU204	68059
EG-EU209	68077
EG-EU116	68061

MOTAQUIP	FAE
LVET103	68096
LVET104	68046
LVET105	68080
LVET108	68067
LVET109	68017
LVET111	68028
LVET116	68047
LVET126	68092
LVET135	68091
LVET138	68057
LVET145	68049
LVET146	68123
LVET147	68080
LVET148	68018
LVET148	68022
LVET149	68011
LVET149	68016
LVET154	68031
LVET157	68052
LVET159	68029
LVET166	68002
LVET169	68043
LVET170	68088
LVET172	68053
LVET173	68026
LVET177	68045
LVET183	68005
LVET191	68061
LVET196	68036
LVET198	68033
LVET202	68036
LVET204	68063
LVET208	68016
LVET212	68043
LVET213	68004
LVET214	68004
LVET215	68044
LVET218	68062
LVET235	68081
LVET238	68079
LVET239	68068
LVET239	68089
LVET241	68014
LVET246	68051
LVET248	68038
LVET256	68037
LVET259	68073
LVET279	68002
LVET283	68025
LVET286	68083
LVET294	68042
LVET298	68013
LVET300	68033
LVET302	68024
LVET305	68001
LVET313	68086
LVET316	68097
LVET317	68060
LVET328	68035
LVET331	68007
LVET335	68034
LVET362	68094
LVET413	68027

MTE-THOMSON	FAE
9500	68061
9501	68022
9502	68004
9502	68015
9503	68069
9504	68003
9505	68002
9506	68005

MTE-T. Cont.	FAE
9507	68026
9508	68097
9514	68011
9514	68016
9515	68092
9518	68046
9520	68014
9521	68089
9526	68031
9527	68040
9529	68012
9530	68050
9531	68015
9531	68029
9532	68031
9536	68034
9537	68029
9539	68084
9541	68076
9542	68035
9551	68080
9552	68039
9553	68027
9555	68123
9556	68043
9557	68002
9560	68007
9562	68028
9563	68012
9565	68091
9566	68083
9567	68045
9568	68068
9573	68058
9575	68079
9577	68038
9586	68049
9588	68024
9592	68094
9595	68092
9597	68001
9600	68056
96001	68082
96003	68009
96007	68006
9601	68063
96014	68094
9602	68042
96028	68073
9603	68007
96032	68044
9604	68067
96043	68096
9605	68017
96053	68078
96054	68048
96056	68059
96057	68030
9606	68025
9608	68036
9609	68064
9611	68033
9612	68057
9614	68018
9618	68036
9621	68016
9632	68062
9639	68041
9640	68052
9641	68077
9643	68060
9645	68047
9647	68088
9650	68060
9658	68015
9663	68045
9667	68051
9669	68053

MTE-T. Cont.	FAE
9676	68006

NGK-NTK	FAE
90224	68084
90323	68030
90373	68067
91678	68057
92367	68045
92571	68017
92776	68036
92980	68091
93113	68048
93529	68023
93600	68026
93985	68003
94585	68007
94795	68028
94848	68013
94883	68092
95385	68097
95572	68005
96047	68014
96635	68073
96788	68096
97599	68069
97611	68074
97656	68080
97700	68019
RTA9000-EE001	68003
RTA9000-EE002	68005
RTA9000-EE004	68023
RTA9000-EE005	68007
RTA9000-EE006	68014
RTA9000-EE007	68013
RTA9000-EE007	68013
RTA9000-EE008	68019
RTA9000-EE009	68048
RTA9000-EE011	68017
RTA9000-EE012	68073
RTA9000-EE013	68074
RTA9000-EE014	68026
RTA9000-EE017	68045
RTA9000-EE024	68091
RTA9000-EE029	68069
RTA9000-EE048	68080
RTA9000-EE058	68084
RTA9000-EE071	68067
RTA9000-EE074	68030
RTA9000-EE085	68036
RTA9000-EE087	68096
RTA9000-EE090	68057
RTA9000-EE112	68092
RTA9000-EEE010	68028

NRF	FAE
707007	68006
707011	68009
707015	68018
707015	68022
707016	68089
707019	68096
707020	68027
707023	68011
707024	68026
707025	68001
707029	68002
707030	68003
707031	68063
707034	68064
707035	68058
707036	68097
707037	68049
707040	68088
707041	68016
707045	68091
707046	68028
707047	68062
707050	68056

NRF Cont.	FAE
707051	68123
707052	68005
707053	68047
707054	68033
707064	68029
707067	68092
707071	68079
707073	68068
707074	68025
707081	68076
707084	68045
707085	68016
707086	68083
707088	68084
707089	68031
707094	68094
707096	68050
707097	68031
707098	68036
707099	68069
707100	68053
707102	68046
707106	68051
707108	68036
707110	68035
707113	68057
707115	68014
707116	68017
707117	68007
707118	68061
707139	68001
707143	68093
707148	68034
707150	68042
707151	68043
707160	68078
707161	68052
707164	68040
707169	68002
707184	68080
707188	68013
707190	68030
707191	68059
707196	68045
707204	68012
707206	68067
707208	68082
707219	68043
707221	68015
707222	68039
707226	68044
707226	68123
707227	68081
707228	68081
707229	68073
707230	68074
707235	68015
707236	68059
707240	68060
707243	68021
707246	68033
707258	68060
707259	68071
707260	68024
707270	68092
707272	68092
707281	68054
707286	68023
707291	68086
707300	68077
707312	68080
707314	68021
707315	68068
707319	68021
707320	68037
707323	68012
707324	68024
EGT-AR-006	68061

NTY	FAE
EGT-AR-008	68038
EGT-AU-000	68003
EGT-AU-000	68005
EGT-AU-001	68035
EGT-AU-002	68036
EGT-AU-004	68002
EGT-AU-006	68092
EGT-AU-008	68033
EGT-AU-009	68097
EGT-AU-014	68089
EGT-AU-015	68083
EGT-AU-017	68083
EGT-AU-025	68068
EGT-AU-026	68084
EGT-AU-029	68093
EGT-FT-003	68080
EGT-FT-017	68086
EGT-FT-019	68074
EGT-FT-020	68073
EGT-FT-021	68081
EGT-FT-022	68081
EGT-FT-023	68080
EGT-ME-000	68043
EGT-ME-001	68027
EGT-ME-002	68050
EGT-ME-004	68053
EGT-ME-005	68052
EGT-ME-006	68051
EGT-ME-007	68018
EGT-ME-009	68012
EGT-ME-011	68043
EGT-ME-012	68022
EGT-ME-013	68046
EGT-ME-014	68039
EGT-ME-015	68029
EGT-ME-015	68031
EGT-ME-017	68060
EGT-ME-018	68034
EGT-ME-019	68054
EGT-ME-022	68015
EGT-ME-022	68029
EGT-ME-025	68041
EGT-ME-027	68040
EGT-ME-027	68071
EGT-ME-032	68094
EGT-ME-034	68023
EGT-ME-036	68004
EGT-PL-001	68088
EGT-PL-003	68123
EGT-PL-006	68069
EGT-PL-007	68091
EGT-PL-011	68096
EGT-PL-023	68038
EGT-PL-053	68082
EGT-SK-000	68058
EGT-SK-001	68063
EGT-SK-007	68013
EGT-SK-009	68056
EGT-VV-001	68067
EGT-VW-000	68049
EGT-VW-001	68062
EGT-VW-004	68026
EGT-VW-005	68057
EGT-VW-006	68045
EGT-VW-007	68001
EGT-VW-009	68011
EGT-VW-009	68016
EGT-VW-010	68028
EGT-VW-011	68016
EGT-VW-012	68076
EGT-VW-016	68017
EGT-VW-020	68036
EGT-VW-023	68007
EGT-VW-024	68079
EGT-VW-031	68021
EGT-VW-033	68014
EGT-VW-036	68025
EGT-VW-040	68033

NTY Cont.	FAE
EGT-VW-042	68078
EGT-VW-058	68002
EGT-VW-066	68042
EGT-VW-078	68092

OPEL	FAE
See also	
Ver también	
Voir aussi	
CHEVROLET	
G.M.	
SAAB	
0855432	68096
1247634	68082
55355404	68047
55489472	68091
55496932	68091
55496933	68082
55557600	68038
55558578	68088
55562408	68123
55564977	68069
55566185	68091
55566631	68123
55574183	68096
55591173	68082
5855377	68123
5855387	68091
5855410	68047
855410	68047
855412	68088
855425	68038
855432	68096
855457	68069
855632	68091

PEUGEOT	FAE
See also	
Ver también	
Voir aussi	
CITROËN-PSA	
16 09 520 380	68073
16 095 200 80	68074
16 095 205 80	68080
1618.EY	68074
1618.FY	68073
1618.SA	68080
55 228 787	68080

PIERBURG	FAE
7.08369.00.0	68001
7.08369.01.0	68002
7.08369.02.0	68011
7.08369.03.0	68005
7.08369.04.0	68003
7.08369.05.0	68047
7.08369.06.0	68027
7.08369.07.0	68026
7.08369.08.0	68028
7.08369.09.0	68036
7.08369.10.0	68021
7.08369.11.0	68024
7.08369.12.0	68012
7.08369.13.0	68097
7.08369.16.0	68033
7.08369.17.0	68091
7.08369.19.0	68057
7.08369.20.0	68076
7.08369.21.0	68016
7.08369.22.0	68079
7.08369.23.0	68089
7.08369.24.0	68042
7.08369.26.0	68035
7.08369.30.0	68046
7.08369.32.0	68088
7.08369.46.0	68069
7.08369.48.0	68045
7.08369.50.0	68036

PIERBURG Cont.	FAE
7.08369.53.0	68049
7.08369.56.0	68002
7.08369.60.0	68052
7.08369.61.0	68040
7.08369.72.0	68062
7.08369.73.0	68084
7.08369.76.0	68034
7.08369.77.0	68015
7.08369.79.0	68014
7.08369.80.0	68023
7.08369.81.0	68007
7.08369.82.0	68017
7.08369.84.0	68016
7.08369.86.0	68056
7.08369.87.0	68060
7.08369.87.9	68060
7.08369.88.0	68060
7.08369.89.0	68041
7.08369.91.0	68015
7.08369.94.0	68039
7.08369.95.0	68013
7.08369.97.0	68029
7.08369.98.0	68074
7.08369.99.0	68073
7.11010.65.0	68021
7.11020.00.0	68043
7.11020.01.0	68031
7.11020.02.0	68058
7.11020.03.0	68064
7.11020.04.0	68080
7.11020.05.0	68051
7.11020.07.0	68063
7.11020.08.0	68061
7.11020.11.0	68031
7.11020.12.0	68053
7.11020.14.0	68067
7.11020.15.0	68081
7.11020.16.0	68071
7.11020.17.0	68019
7.11020.18.0	68048
7.11020.21.0	68093
7.11020.22.0	68059
7.11020.23.0	68078
7.11020.28.0	68012
7.11020.32.0	68041
7.11020.35.0	68018
7.11020.38.0	68096
7.11020.53.0	68094
7.11020.59.0	68083
7.11020.63.0	68025
7.11020.64.0	68123
7.11020.65.0	68021
7.11020.76.0	68082
7.11020.79.0	68044
7.11020.82.0	68050
7.11020.86.0	68086
7.11020.94.0	68037
7.12196.00.0	68030
7.12196.05.0	68092

PORSCHE	FAE
See also	
Ver también	
Voir aussi	
AUDI	
SEAT	
SKODA	
VOLKSWAGEN	
03G 906 088 AN	68001
4H0 906 088 AB	68033
955 606 688 10	68097
958 606 288 31	68092
958 606 288 50	68068
958 606 688 31	68084

SAAB	FAE
See also	
Ver también	
Voir aussi	
OPEL	
55 190 616	68047
55 566 185	68091

SEAT	FAE
See also	
Ver también	
Voir aussi	
AUDI	
PORSCHE	
SKODA	
VOLKSWAGEN	
03G 906 088 A	68001
03G 906 088 AA	68090
03G 906 088 AC	68049
03G 906 088 AF	68024
03G 906 088 AM	68001
03G 906 088 AN	68001
03G 906 088 AT	68001
03G 906 088 D	68005
03G 906 088 F	68028
03G 906 088 J	68001
03G 906 088 K	68011
03L 906 088 AA	68021
03L 906 088 AB	68092
03L 906 088 AJ	68002
03L 906 088 AK	68003
03L 906 088 BS	68001
03L 906 088 CC	68003
03L 906 088 CH	68035
03L 906 088 DE	68021
03L 906 088 FG	68036
03L 906 088 GR	68021
03L 906 088 HE	68021
03L 906 088 HL	68024
03L 906 088 J	68002
03L 906 088 M	68003
03L 906 088 N	68002
03L 906 088 P	68036
03P 906 088 C	68036
03P 906 088 E	68036
045 906 088 C	68063
045 906 088 D	68058
045 906 088 F	68064
045 906 088 G	68063
045 906 088 H	68056
045 906 088 J	68056
04L 906 088	68007
04L 906 088 AE	68007
04L 906 088 B	68014
04L 906 088 BD	68019
04L 906 088 BF	68059
04L 906 088 DA	68013
04L 906 088 DH	68078
04L 906 088 DQ	68007
04L 906 088 E	68017
04L 906 088 HT	68007
04L 906 088 K	68048
4F0 906 088	68090

SIDAT	FAE
82.1000	68054
82.1000A2	68054
82.1004	68060
82.1006	68040
82.1007	68094
82.1011	68041
82.1011A2	68041
82.1014	68012
82.1015	68040
82.1015	68071
82.1015A2	68040
82.1015A2	68071
82.1018	68077
82.1028	68007

SIDAT Cont.	FAE
82.1033	68086
82.1033A2	68086
82.1035	68001
82.1038	68037
82.1039	68075
82.104	68003
82.104	68005
82.1041	68074
82.1041A2	68074
82.1042	68073
82.1042A2	68073
82.1043	68081
82.1043A2	68081
82.1049	68081
82.105	68035
82.106	68036
82.1061	68079
82.1061A2	68079
82.106A2	68036
82.108	68049
82.108A2	68049
82.109	68058
82.109A2	68058
82.110	68036
82.110A2	68036
82.111	68036
82.1111	68089
82.1111A2	68089
82.1112	68064
82.1114	68083
82.1114A2	68083
82.1115	68056
82.1115	68063
82.1115A2	68056
82.1115A2	68063
82.112	68062
82.1124	68002
82.1127	68021
82.1127A2	68021
82.1131	68014
82.1134	68025
82.1134A2	68025
82.1137	68083
82.1137A2	68083
82.1140	68084
82.115	68011
82.1151	68042
82.1151A2	68042
82.1156	68002
82.116	68002
82.117	68026
82.1173	68013
82.1176	68033
82.119	68057
82.119A2	68057
82.120	68045
82.1202	68076
82.1202A2	68076
82.1208	68093
82.120A2	68045
82.121	68001
82.1212	68019
82.1216	68090
82.1218	68048
82.1220	68092
82.1224	68078
82.1229	68068
82.123	68011
82.123	68016
82.1236	68092
82.1236A2	68092
82.1237	68092
82.124	68001
82.1247	68059
82.1249	68093
82.125	68025
82.125	68028
82.1256	68059

SIDAT Cont.	FAE
82.1256A2	68059
82.1257	68030
82.125A2	68025
82.125A2	68028
82.126	68092
82.126A2	68092
82.128	68033
82.128A2	68033
82.129	68016
82.129A2	68042
82.131	68047
82.131A2	68047
82.132	68088
82.132A2	68088
82.1330	68004
82.134	68123
82.1342	68082
82.1342A2	68082
82.1353	68094
82.1368	68068
82.1375	68024
82.138	68069
82.138A2	68069
82.139	68091
82.139A2	68091
82.1412	68015
82.1422	68045
82.143	68096
82.1448	68067
82.1478	68041
82.1506	68006
82.151	68043
82.151A2	68043
82.152	68027
82.152A2	68027
82.153	68050
82.153A2	68050
82.154	68015
82.154	68029
82.154A2	68029
82.155	68053
82.155A2	68053
82.156	68052
82.157	68052
82.157A2	68052
82.158	68051
82.158A2	68051
82.159	68018
82.159A2	68018
82.161	68012
82.161A2	68012
82.165	68043
82.165A2	68043
82.166	68022
82.1664	68006
82.168	68018
82.169	68046
82.169A2	68046
82.170	68015
82.170	68029
82.171	68039
82.171A2	68039
82.172	68046
82.173	68015
82.176	68080
82.176A2	68080
82.181	68044
82.181A2	68044
82.187	68061
82.194	68067
82.194A2	68067
82.206	68031
82.206A2	68031
82.2258	68023
82.2268	68031
82.2299	68006
82.2299A2	68006
82.239	68017

SIDAT Cont.	FAE
82.239A2	68017
82.243	68063
82.243A2	68063
82.246	68097
82.246A2	68097
82.251	68038
82.265	68038
82.292	68060
82.292A2	68060
82.293	68034
82.308	68080
82.308A2	68080

SKODA	FAE
See also	
Ver también	
Voir aussi	
AUDI	
PORSCHE	
SEAT	
VOLKSWAGEN	
038 906 088 B	68062
03G 906 088 A	68001
03G 906 088 AA	68090
03G 906 088 AC	68049
03G 906 088 AF	68024
03G 906 088 AM	68001
03G 906 088 AN	68001
03G 906 088 AT	68001
03G 906 088 D	68005
03G 906 088 J	68001
03G 906 088 K	68011
03L 906 088 AA	68021
03L 906 088 AJ	68002
03L 906 088 AK	68003
03L 906 088 BS	68001
03L 906 088 CC	68003
03L 906 088 CH	68035
03L 906 088 DE	68021
03L 906 088 FG	68036
03L 906 088 GR	68021
03L 906 088 HE	68021
03L 906 088 HL	68024
03L 906 088 J	68002
03L 906 088 M	68003
03L 906 088 N	68002
03L 906 088 P	68036
03P 906 088 C	68036
03P 906 088 E	68036
045 906 088 C	68063
045 906 088 D	68058
045 906 088 F	68064
045 906 088 G	68063
045 906 088 H	68056
045 906 088 J	68056
04L 906 088	68007
04L 906 088 AE	68007
04L 906 088 B	68014
04L 906 088 BD	68019
04L 906 088 BF	68059
04L 906 088 DA	68013
04L 906 088 DH	68078
04L 906 088 DQ	68007
04L 906 088 E	68017
04L 906 088 HT	68007
04L 906 088 K	68048
4F0 906 088	68090

TOPRAN	FAE
116 969	68003
116 970	68002
116 972	68026
116 976	68092
117 269	68001
117 270	68097
117 543	68035
117 545	68084
117 547	68076
409 574	68094
409 575	68029
409 575	68034
409 577	68046
409 578	68039
409 581	68012
409 582	68050
409 583	68043
409 585	68027
638 555	68005
638 556	68018
638 556	68022
638 557	68011
638 557	68016
638 558	68015
638 559	68079
638 561	68007
638 562	68060
638 564	68031
638 565	68015
638 565	68029
638 565	68031
638 566	68033
638 568	68036
638 573	68067
638 583	68037

TRISCAN	FAE
8815 11104	68015
8826 10038	68096
8826 10046	68080
8826 15000	68080
8826 15002	68073
8826 15003	68074
8826 15007	68081
8826 23001	68046
8826 23002	68050
8826 23003	68053
8826 23005	68018
8826 23006	68012
8826 23007	68043
8826 23008	68039
8826 23009	68040
8826 23010	68051
8826 23013	68015
8826 23013	68029
8826 23014	68027
8826 23015	68094
8826 23016	68031
8826 23017	68052
8826 23018	68077
8826 23020	68023
8826 23023	68041
8826 23026	68054
8826 23027	68060
8826 23028	68004
8826 23036	68022
8826 23037	68029
8826 23041	68071
8826 23044	68015
8826 24000	68047
8826 24002	68088
8826 24004	68091
8826 24007	68069
8826 24013	68082
8826 24014	68123
8826 27001	68067
8826 29000	68001
8826 29001	68002

TRISCAN Cont.	FAE
8826 29002	68016
8826 29003	68026
8826 29004	68076
8826 29006	68042
8826 29007	68035
8826 29011	68033
8826 29012	68058
8826 29013	68017
8826 29014	68097
8826 29015	68007
8826 29016	68079
8826 29019	68002
8826 29022	68057
8826 29024	68063
8826 29026	68089
8826 29027	68083
8826 29031	68014
8826 29033	68028
8826 29037	68064
8826 29039	68025
8826 29043	68003
8826 29043	68005
8826 29044	68036
8826 29045	68036
8826 29046	68059
8826 29048	68056
8826 29049	68084
8826 29052	68049
8826 29056	68019
8826 29059	68093
8826 29062	68011
8826 29063	68048
8826 29064	68078
8826 29071	68013
8826 29082	68045
8826 29099	68016
8826 29107	68092
8826 29116	68083
8826 29136	68090
8826 29142	68092
8826 29147	68021
8826 29148	68024
8826 29153	68062
8826 29156	68033

TRUCKTEC AUTO.	FAE
02.17.094	68015
02.17.097	68077
02.17.098	68046
02.17.099	68018
02.17.099	68022
02.17.101	68023
02.17.102	68031
02.17.103	68027
02.17.123	68053
02.17.125	68050
02.17.127	68043
02.17.129	68015
02.17.146	68004
02.17.153	68094
02.17.154	68039
02.17.155	68012
02.17.157	68034
02.17.160	68041
02.17.162	68060
02.17.163	68040
02.17.164	68043
02.42.416	68071
07.17.073	68007
07.17.080	68033
07.17.081	68017
07.17.082	68097
07.17.085	68014
07.17.093	68083
07.17.094	68083
07.17.098	68068
07.17.103	68076
07.17.114	68042

T. AUTO Cont.	FAE
07.17.116	68016
07.17.120	68001
07.17.124	68093

VDO	FAE
280-355-000-3380	68002
280-355-002-0380	68068
280-355-002-6380	68062
280-355-002-8380	68092
280-355-003-0380	68068
280-355-003-4380	68033
280-355-004-0380	68093
280-355-004-4380	68092
280-355-004-4380	68092
280-355-004-5380	68013
280-355-004-8380	68019
280-355-004-9380	68059
280-355-005-0380	68059
280-355-005-2380	68030
280-355-005-3380	68078
291-000-021-2900	68002
291-000-021-3000	68035
291-000-021-3100	68011
291-000-021-3300	68001
291-000-021-3400	68057
291-000-021-3500	68036
291-000-021-3700	68084
291-000-021-3800	68045
291-000-021-4100	68083
291-000-021-4300	68049
291-000-021-4500	68024
291-000-021-4900	68083
291-000-021-5000	68014
291-000-021-5100	68017
291-000-021-5200	68007
291-000-021-5600	68025
291-000-021-5900	68064
291-000-021-6100	68056
291-000-080-9700	68063
291-000-080-9800	68058
291-000-080-9900	68048
291-000-081-0300	68079
291-000-081-0700	68093
291-000-081-0900	68007
291-000-081-1110	68036
291-000-082-6800	68089
291-000-082-7400	68002
291-000-085-4900	68076
291-000-085-5000	68042
291-000-097-8200	68067
A2C59507002Z	68003
A2C59507003Z	68091
A2C59507004Z	68005
A2C59507006Z	68097
A2C59507007Z	68026
A2C59507009Z	68028
A2C59507010Z	68047
A2C59507011Z	68088
A2C59507498Z	68027
A2C59507499Z	68018
A2C59507499Z	68022
A2C59507500Z	68033
A2C59507501Z	68043
A2C59507502Z	68069
A2C59507505Z	68050
A2C59507508Z	68123
A2C59507510Z	68096

VEMO	FAE
10-72-0003	68049
10-72-0004	68028
10-72-0005	68011
10-72-0005	68016
10-72-0006	68002
10-72-0008	68016
10-72-0010	68003
10-72-0011	68026
10-72-0013	68045

VEMO Cont.	FAE
10-72-0016	68036
10-72-0017	68033
10-72-0018	68058
10-72-0019	68017
10-72-0021	68005
10-72-0026	68097
10-72-0030	68014
10-72-0031	68083
10-72-0032	68068
10-72-0035	68083
10-72-0036	68056
10-72-0038	68025
10-72-0099	68045
10-72-1276	68001
10-72-1276-1	68001
10-72-1338	68076
10-72-1339	68092
10-72-1343	68035
10-72-1348	68042
10-72-1350	68036
10-72-1351	68063
10-72-1352	68007
10-72-1354	68033
10-72-1374	68079
10-72-1377	68024
10-72-1383	68089
10-72-1390	68084
10-72-1392	68002
10-72-1398	68064
10-72-1401	68057
10-72-1403	68002
10-72-1457	68048
10-72-1463	68093
10-72-1465	68013
10-72-1475	68059
10-72-1476	68019
10-72-1477	68078
10-72-1487	68090
10-72-1543	68030
10-72-1565	68068
22-72-0147	68080
24-72-0143	68061
24-72-0217	68074
24-72-0218	68073
24-72-0219	68044
24-72-0221	68080
24-72-0260	68038
24-72-0263	68086
24-72-0264	68081
24-72-0265	68081
24-72-0268	68075
24-72-0275	68037
24-72-0277	68080
30-72-0047	68041
30-72-0185	68051
30-72-0186	68027
30-72-0188	68053
30-72-0193	68046
30-72-0194	68039
30-72-0195	68031
30-72-0197	68050
30-72-0199	68043
30-72-0200	68018
30-72-0200	68022
30-72-0202	68012
30-72-0203	68012
30-72-0204	68052
30-72-0205	68004
30-72-0205	68015
30-72-0205	68029
30-72-0275	68071
30-72-0792	68060
30-72-0793	68094
30-72-0794	68054
30-72-0822	68040
30-72-0830	68041
30-72-0877	68034
30-72-0883	68023

VEMO Cont.	FAE
30-72-0885	68015
30-72-0889	68077
30-72-0890	68004
40-72-0288	68096
40-72-0290	68123
40-72-0294	68069
40-72-0296	68088
40-72-0297	68047
40-72-0298	68091
95-72-0071	68067

VOLKSWAGEN	FAE
See also	
Ver también	
Voir aussi	
AUDI	
PORSCHE	
SEAT	
SKODA	
036 906 088 P	68036
038 906 088 B	68062
03G 906 088	68016
03G 906 088 A	68001
03G 906 088 AA	68090
03G 906 088 AC	68049
03G 906 088 AF	68024
03G 906 088 AM	68001
03G 906 088 AN	68001
03G 906 088 AT	68001
03G 906 088 B	68026
03G 906 088 D	68005
03G 906 088 F	68028
03G 906 088 J	68001
03G 906 088 K	68011
03K 906 088 A	68042
03K 906 088 B	68076
03L 906 088 AA	68021
03L 906 088 AB	68092
03L 906 088 AJ	68002
03L 906 088 AK	68003
03L 906 088 AT	68057
03L 906 088 B	68002
03L 906 088 BA	68002
03L 906 088 BP	68016
03L 906 088 BS	68001
03L 906 088 C	68002
03L 906 088 CC	68003
03L 906 088 CE	68026
03L 906 088 CH	68035
03L 906 088 DE	68021
03L 906 088 DF	68042
03L 906 088 DH	68045
03L 906 088 DP	68042
03L 906 088 EF	68045
03L 906 088 FF	68042
03L 906 088 FG	68036
03L 906 088 GR	68021
03L 906 088 HE	68021
03L 906 088 HG	68042
03L 906 088 HH	68076
03L 906 088 HJ	68016
03L 906 088 HL	68024
03L 906 088 HM	68026
03L 906 088 J	68002
03L 906 088 M	68003
03L 906 088 N	68002
03P 906 088 C	68036
03P 906 088 E	68036
045 906 088 C	68063
045 906 088 D	68058
045 906 088 F	68064
045 906 088 G	68063
045 906 088 H	68056
045 906 088 J	68056
04L 906 088	68007
04L 906 088 AE	68007
04L 906 088 B	68014
04L 906 088 BD	68019

VW Cont.	FAE
04L 906 088 BF	68059
04L 906 088 CG	68059
04L 906 088 CK	68093
04L 906 088 CP	68030
04L 906 088 DA	68013
04L 906 088 DH	68078
04L 906 088 DQ	68007
04L 906 088 DR	68093
04L 906 088 E	68017
04L 906 088 HT	68007
04L 906 088 K	68048
057 906 088 G	68068
059 906 088 A	68097
059 906 088 BJ	68084
059 906 088 BS	68092
059 906 088 CF	68092
059 906 088 CL	68084
07Z 906 088 A	68068
4F0 906 088	68090
4H0 906 088 AB	68033
4M0 906 088 AL	68092
4M0 906 088 N	68092

VOLVO	FAE
30713642	68067
30713642AD	68067
31293032	68067
31370465	68067
31431047	68067
50436389	68067

WALKER	FAE
1003-1011	68006
1003-1012	68006
1003-1016	68009
273-10343	68012
273-10344	68043
273-10350	68007
273-10354	68041
273-20001	68003
273-20002	68027
273-20004	68035
273-20005	68091
273-20006	68005
273-20007	68011
273-20007	68016
273-20009	68097
273-20010	68016
273-20013	68026
273-20014	68057
273-20015	68076
273-20017	68036
273-20018	68018
273-20019	68033
273-20021	68084
273-20022	68043
273-20023	68028
273-20024	68069
273-20027	68042
273-20028	68015
273-20029	68012
273-20030	68045
273-20031	68047
273-20032	68031
273-20036	68067
273-20040	68036
273-20043	68046
273-20045	68060
273-20046	68050
273-20048	68088
273-20049	68036
273-20051	68015
273-20052	68043
273-20054	68054
273-20057	68026
273-20058	68083
273-20060	68080
273-20065	68046

WALKER Cont.	FAE	WALKER Cont.	FAE		FAE		FAE		FAE
273-20068	68079	273-20488	68030						
273-20070	68049	273-20489	68078						
273-20071	68092	273-20508	68040						
273-20074	68058	273-20630	68004						
273-20075	68018	273-20632	68071						
273-20076	68015	273-20638	68092						
273-20076	68029	273-20640	68009						
273-20079	68123	273-20670	68037						
273-20081	68063	273-20674	68075						
273-20087	68067	273-20702	68006						
273-20091	68053	273-20703	68006						
273-20092	68089	273-20727	68006						
273-20097	68094	273-20805	68076						
273-20098	68012	273-20922	68082						
273-20099	68042	273-20994	68041						
273-20101	68024								
273-20102	68002								
273-20106	68023								
273-20116	68052								
273-20118	68052								
273-20123	68096								
273-20124	68080								
273-20134	68080								
273-20135	68040								
273-20141	68083								
273-20143	68045								
273-20146	68014								
273-20147	68017								
273-20154	68016								
273-20158	68015								
273-20162	68051								
273-20175	68007								
273-20178	68036								
273-20182	68039								
273-20191	68061								
273-20198	68094								
273-20209	68073								
273-20211	68074								
273-20220	68044								
273-20232	68022								
273-20246	68023								
273-20248	68077								
273-20252	68038								
273-20265	68068								
273-20267	68025								
273-20280	68086								
273-20283	68081								
273-20294	68081								
273-20296	68064								
273-20299	68060								
273-20300	68062								
273-20305	68056								
273-20307	68092								
273-20318	68006								
273-20320	68006								
273-20323	68006								
273-20324	68006								
273-20328	68009								
273-20342	68007								
273-20346	68031								
273-20349	68041								
273-20350	68094								
273-20361	68038								
273-20365	68048								
273-20366	68090								
273-20367	68093								
273-20372	68068								
273-20380	68033								
273-20382	68084								
273-20398	68015								
273-20403	68012								
273-20404	68015								
273-20412	68068								
273-20460	68092								
273-20479	68013								
273-20484	68019								
273-20485	68059								
273-20486	68059								

NOTES
NOTAS
REMARQUES

FAE

CEGTS1 - 1111800

CPS1- 1111784

COX7- 1111759

CGM3 - 1111736

CABS3 - 1111734

CEV1 - 1111730

CE3 - 1111773

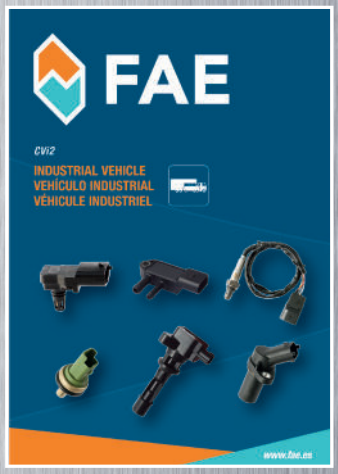

CVi2- 1111770

Ci2 - 1111658

CT2 - 1111645

CBP5 - 1111610

eCatalog
FAE

eCatalog

PREMIER TecDoc® DATA SUPPLIER

TÜVRheinland CERTIFICADO — Sistema de Gestión ISO 9001:2015 — www.tuv.com ID 0091004863

TÜVRheinland CERTIFICADO — Sistema de Gestión IATF 16949:2016 — www.tuv.com ID 0091004863

QML — QUALITY MANAGEMENT LEAD — ISO 14001:2015 — REGISTRO DE CERTIFICADO

CEGTS1

FAE

FRANCISCO ALBERO S.A.U.

Rafael Barradas, 19
Districte Econòmic Granvia L'H
08908 L'Hospitalet de Ll.

34-**93 261 85 00**
Barcelona - SPAIN

fae@fae.es
www.fae.es

FOLLOW US on

Ref. 1111800